Order No: PHAAM1001037C3

Service Manual

Air Conditioner

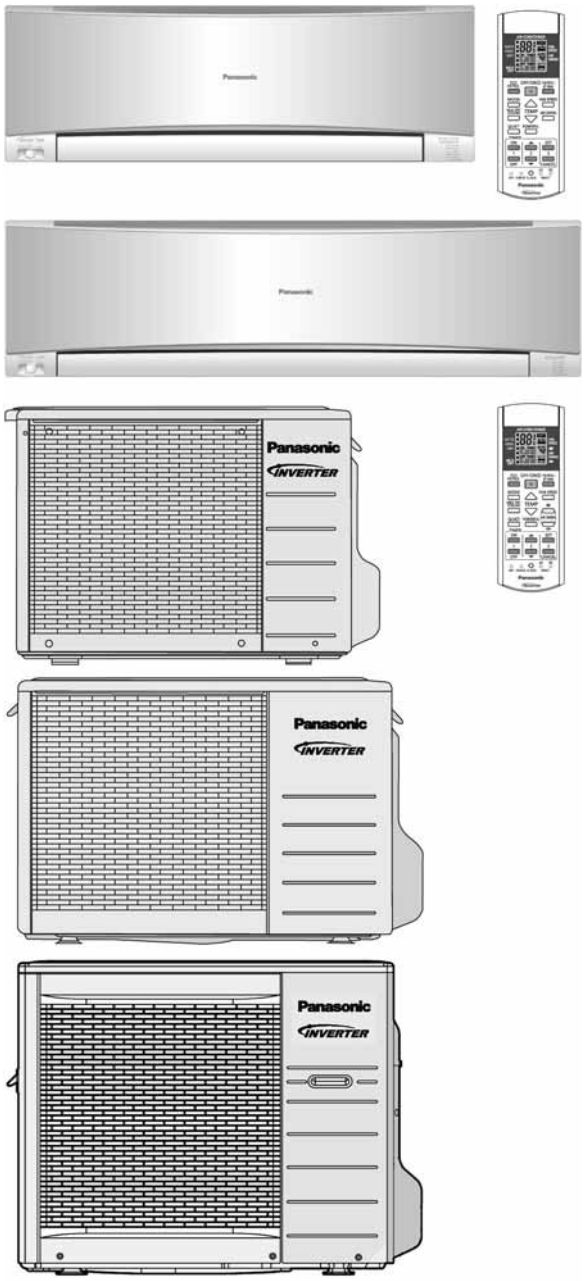

Indoor Unit	Outdoor Unit
CS-S9KKQ	CU-S9KKQ
CS-S12KKQ	CU-S12KKQ
CS-S18KKQ	CU-S18KKQ
CS-S24KKQ	CU-S24KKQ

⚠ WARNING

This service information is designed for experienced repair technicians only and is not designed for use by the general public. It does not contain warnings or cautions to advise non-technical individuals of potential dangers in attempting to service a product. Products powered by electricity should be serviced or repaired only by experienced professional technicians. Any attempt to service or repair the products dealt with in this service information by anyone else could result in serious injury or death.

⚠ PRECAUTION OF LOW TEMPERATURE

In order to avoid frostbite, be assured of no refrigerant leakage during the installation or repairing of refrigerant circuit.

Panasonic®

TABLE OF CONTENTS

1 Safety Precautions

- Read the following “SAFETY PRECAUTIONS” carefully before perform any servicing.
- Electrical work must be installed or serviced by a licensed electrician. Be sure to use the correct rating of the power plug and main circuit for the model installed.
- The caution items stated here must be followed because these important contents are related to safety. The meaning of each indication used is as below. Incorrect installation or servicing due to ignoring of the instruction will cause harm or damage, and the seriousness is classified by the following indications.

WARNING	This indication shows the possibility of causing death or serious injury
CAUTION	This indication shows the possibility of causing injury or damage to properties.

- The items to be followed are classified by the symbols:

⃠	This symbol denotes item that is PROHIBITED from doing.

- Carry out test run to confirm that no abnormality occurs after the servicing. Then, explain to user the operation, care and maintenance as stated in instructions. Please remind the customer to keep the operating instructions for future reference.

WARNING	
1. Do not modify the machine, part, material during repairing service.	
2. If wiring unit is supplied as repairing part, do not repair or connect the wire even only partial wire break. Exchange the whole wiring unit.	
3. Do not wrench the fasten terminal. Pull it out or insert it straightly.	
4. Engage authorized dealer or specialist for installation and servicing. If installation of servicing done by the user is defective, it will cause water leakage, electrical shock or fire.	
5. Install according to this installation instructions strictly. If installation is defective, it will cause water leakage, electric shock or fire.	
6. Use the attached accessories parts and specified parts for installation and servicing. Otherwise, it will cause the set to fall, water leakage, fire or electrical shock.	
7. Install at a strong and firm location which is able to withstand the set’s weight. If the strength is not enough or installation is not properly done, the set will drop and cause injury.	
8. For electrical work, follow the local national wiring standard, regulation and the installation instruction. An independent circuit and single outlet must be used. If electrical circuit capacity is not enough or defect found in electrical work, it will cause electrical shock or fire.	
9. This equipment is strongly recommended to be installed with Earth Leakage Circuit Breaker (ELCB) or Residual Current Device (RCD). Otherwise, it may cause electrical shock and fire in case equipment breakdown or insulation breakdown.	
10. Do not use joint cable for indoor/outdoor connection cable. Use the specified indoor/outdoor connection cable, refer to installation instruction CONNECT THE CABLE TO THE INDOOR UNIT and connect tightly for indoor/outdoor connection. Clamp the cable so that no external force will be acted on the terminal. If connecting or fixing is not perfect, it will cause heat up or fire at the connection.	
11. Wire routing must be properly arranged so that control board cover is fixed properly. If control board cover is not fixed perfectly, it will cause heat-up or fire at the connection point of terminal, fire or electrical shock.	
12. When install or relocate air conditioner, do not let any substance other than the specified refrigerant, eg. air etc. mix into refrigeration cycle (piping). (Mixing of air etc. will cause abnormal high pressure in refrigeration cycle and result in explosion, injury etc.).	
13. Do not install outdoor unit near handrail of veranda. When installing air-conditioner unit at veranda of high rise building, child may climb up to outdoor unit and cross over the handrail and causing accident.	
14. This equipment must be properly earthed. Earth line must not be connected to gas pipe, water pipe, earth of lightning rod and telephone. Otherwise, it may cause electrical shock in case equipment breakdown or insulation breakdown.	⃠
15. Keep away from small children, the thin film may cling to nose and mouth and prevent breathing.	⃠
16. Do not use unspecified cord, modified cord, joint cord or extension cord for power supply cord. Do not share the single outlet with other electrical appliances. Poor contact, poor insulation or over current will cause electrical shock or fire.	⃠
17. Tighten the flare nut with torque wrench according to specified method. If the flare nut is over-tightened, after a long period, the flare may break and cause refrigerant gas leakage.	
18. For R410A models, when connecting the piping, do not use any existing (R22) pipes and flares nuts. Using such same may cause abnormally high pressure in the refrigeration cycle (piping), and possibly result in explosion and injury. In case of using existing (R22) pipes during installation of R410A models, must carry out pump down properly to collect back the refrigerant and oil before installation new unit. Thickness of copper pipes used with R410A must be more than 0.6mm. Never use copper pipes thinner than 0.6mm. It is desirable that the amount of residual oil is less than 40 mg/10m.	⃠

19. During installation, install the refrigerant piping properly before run the compressor. (Operation of compressor without fixing refrigeration piping and valves at opened condition will cause suck-in of air, abnormal high pressure in refrigeration cycle and result in explosion, injury etc.).
20. During pump down operation, stop the compressor before remove the refrigeration piping. (Removal of refrigeration piping while compressor is operating and valves are opened condition will cause suck-in of air, abnormal high pressure in refrigeration cycle and result in explosion, injury etc.).
21. After completion of installation or service, confirm there is no leakage of refrigerant gas. It may generate toxic gas when the refrigerant contacts with fire.
22. Ventilate if there is refrigerant gas leakage during operation. It may cause toxic gas when the refrigerant contacts with fire.
23. Do not insert your fingers or other objects into the unit, high speed rotating fan may cause injury.
24. Must not use other parts except original parts describe in catalog and manual.

CAUTION
1. Do not install the unit at place where leakage of flammable gas may occur. In case gas leaks and accumulates at surrounding of the unit, it may cause fire.
2. Carry out drainage piping as mentioned in installation instructions. If drainage is not perfect, water may enter the room and damage the furniture.
3. Tighten the flare nut with torque wrench according to specified method. If the flare nut is over-tightened, after a long period, the flare may break and cause refrigerant gas leakage.
4. Do not touch outdoor unit air inlet and aluminium fin. It may cause injury.
5. Select an installation location which is easy for maintenance.
6. Pb free solder has a higher melting point than standard solder; typically the melting point is 50°F – 70°F (30°C – 40°C) higher. Please use a high temperature solder iron. In case of the soldering iron with temperature control, please set it to 700 ± 20°F (370 ± 10°C). Pb free solder will tend to splash when heated too high (about 1100°F / 600°C).
7. Power supply connection to the air conditioner. Connect the power supply cord of the air conditioner to the mains using one of the following methods. Power supply point shall be the place where there is ease for access for the power disconnection in case of emergency. In some countries, permanent connection of this room air conditioner to the power supply is prohibited. i. Power supply connection to the receptacle using a power plug. Use an approved 15/16A (1.0 ~ 1.75HP) or 16A (2.0HP) or 20A (2.5HP) power plug with earth pin for the connection to the socket. ii. Power supply connection to a circuit breaker for the permanent connection. Use an approved 16A (1.0 ~ 2.0HP) or 20A (2.5HP) circuit breaker for the permanent connection. It must be a double pole switch with a minimum 3.0 mm contact gap.
8. Do not release refrigerant during piping work for installation, servicing, reinstallation and during repairing a refrigerant parts. Take care of the liquid refrigerant, it may cause frostbite.
9. Installation or servicing work: It may need two people to carry out the installation or servicing work.
10. Do not install this appliance in a laundry room or other location where water may drip from the ceiling, etc.
11. Do not sit or step on the unit, you may fall down accidentally.
12. Do not touch the sharp aluminium fin, sharp parts may cause injury.

2 Specification

Model			Indoor	CS-S9KKQ						CS-S12KKQ				
			Outdoor	CU-S9KKQ						CU-S12KKQ				
Performance Test Condition				JIS						JIS				
Power Supply			Phase, Hz	Single, 60						Single, 60				
			V	220			230			220			230	
				Min.	Mid.	Max.	Min.	Mid.	Max.	Min.	Mid.	Max.	Min.	Mid.	Max.
Cooling	Capacity		kW	0.80	2.65	3.20	0.80	2.65	3.20	0.85	3.23	4.00	0.85	3.23	4.00
			BTU/h	2730	9040	10900	2730	9040	10900	2900	11000	13600	2900	11000	13600
			kJ/h	2880	9540	11520	2880	9540	11520	3060	11630	14400	3060	11630	14400
	Running Current		A	-	3.4	-	-	3.3	-	-	4.1	-	-	3.9	-
	Input Power		W	170	695	870	170	695	870	175	855	1.14k	175	855	1.14k
	EER		W/W	4.71	3.81	3.68	4.71	3.81	3.68	4.86	3.78	3.51	4.86	3.78	3.51
			Btu/hW	16.06	13.01	12.53	16.06	13.01	12.53	16.57	12.87	11.93	16.57	12.87	11.93
			kJ/hW	16.9	13.7	13.2	16.9	13.7	13.2	17.5	13.6	12.6	17.5	13.6	12.6
	Power Factor		%	-	93	-	-	92	-	-	95	-	-	95	-
	Indoor Noise (H / L / QLo)		dB-A	36 / 26 / 23			36 / 26 / 23			38 / 28 / 25			38 / 28 / 25		
	Outdoor Noise (H / L)		dB-A	46 / -			47 / -			47 / -			48 / -		
Max Current (A) / Max Input Power (W)				5.8 / 1.04k						7.2 / 1.35k					
Starting Current (A)				3.4						4.1					
Compressor	Type			Hermetic Motor						Hermetic Motor					
	Motor Type			Brushless (6 poles)						Brushless (6 poles)					
	Output Power		W	650						650					
Indoor Fan	Type			Cross-flow fan						Cross-flow fan					
	Material			ASG20K1						ASG20K1					
	Motor Type			Induction (4 poles)						Induction (4 poles)					
	Input Power		W	44						44					
	Output Power		W	20						20					
	Speed	QLo	rpm	680 - 680						680 - 680					
		Lo	rpm	750 - 750						750 - 750					
		Me	rpm	880 - 880						900 - 900					
		Hi	rpm	1020 - 1020						1060 - 1060					
		SHi	rpm	1130 - 1130						1130 - 1130					
Outdoor Fan	Type			Propeller						Propeller					
	Material			PP						PP					
	Motor Type			Induction (6 poles)						Induction (6 poles)					
	Input Power		W	56 -60						65 - 78					
	Output Power		W	20						28					
	Speed	Hi	rpm	770 - 800						790 - 820					
Moisture Removal			L/h (Pt/h)	1.6 (3.4)						1.8 (3.8)					
Indoor Airflow		QLo	m^3/min (ft^3/min)	6.4 (230)						6.7 (240)					
		Lo	m^3/min (ft^3/min)	7.1 (250)						7.4 (260)					
		Me	m^3/min (ft^3/min)	8.3 (290)						8.9 (315)					
		Hi	m^3/min (ft^3/min)	9.6 (340)						10.5 (370)					
		SHi	m^3/min (ft^3/min)	10.6 (380)						11.2 (395)					
Outdoor Airflow		Hi	m^3/min (ft^3/min)	22.0 (780)			22.9 (810)			31.2 (1100)			32.6 (1150)		

Refrigeration Cycle	Control Device		Capillary Tube		Capillary Tube	
	Refrigerant Oil	cm^3	RB68A or Freol Alpha68M (320)		RB68A or Freol Alpha68M (320)	
	Refrigerant Type	g (oz)	R410A, 760 (26.8)		R410A, 850 (30.0)	
Dimension	Height(I/D / O/D)	mm (inch)	290 (11-7/16)	510 (20-3/32)	290 (11-7/16)	540 (21-9/32)
	Width (I/D / O/D)	mm (inch)	870 (34-9/32)	650 (25-19/32)	870 (34-9/32)	780 (30-23/32)
	Depth (I/D / O/D)	mm (inch)	204 (8-1/16)	230 (9-1/16)	204 (8-1/16)	289 (11-13/32)
Weight	Net (I/D / O/D)	kg (lb)	9 (20)	24 (53)	9 (20)	29 (64)
Piping	Pipe Diameter (Liquid / Gas)	mm (inch)	6.35 (1/4) / 9.52 (3/8)		6.35 (1/4) / 12.7 (1/2)	
	Standard length	m (ft)	7.5 (24.6)		7.5 (24.6)	
	Length range (min – max)	m (ft)	3 (9.8) ~ 15 (49.2)		3 (9.8) ~ 15 (49.2)	
	I/D & O/D Height different	m (ft)	5.0 (16.4)		5.0 (16.4)	
	Additional Gas Amount	g/m (oz/ft)	15 (0.2)		15 (0.2)	
	Length for Additional Gas	m (ft)	7.5 (24.6)		7.5 (24.6)	
Drain Hose	Inner Diameter	mm	16		16	
	Length	mm	550		550	
Indoor Heat Exchanger	Fin Material		Aluminium (Pre coated)		Aluminium (Pre coated)	
	Fin Type		Slit Fin		Slit Fin	
	Row x Stage x FPI		2 x 15 x 21		2 x 15 x 21	
	Size (W x H x L)	mm	610 x 315 x 25.4		610 x 315 x 25.4	
Outdoor Heat Exchanger	Fin Material		Aluminium (Blue coated)		Aluminium (Blue coated)	
	Fin Type		Slit Fin		Louver Fin	
	Row x Stage x FPI		2 x 23 x 17		1 x 20 x 19	
	Size (W x H x L)	mm	25.4 x 483.0 x 553.4 573.4		22.0 x 508.0 x 708.4 720.4	
Air Filter	Material		Polypropelene		Polypropelene	
	Type		One-touch		One-touch	
Power Supply			Indoor		Indoor	
Power Supply Cord		A	3 Core (1.5mm), 1.9m (10A)		3 Core (1.5mm), 1.9m (10A)	
Thermostat			-		-	
Protection Device			-		-	
			DRY BULB	WET BULB	DRY BULB	WET BULB
Indoor Operation Range		Maximum	32	23	32	23
		Minimum	16	11	16	11
Outdoor Operation Range		Maximum	43	26	43	26
		Minimum	16	11	16	11

1. Cooling capacities are based on indoor temperature of 27°C DRY BULB (80.6°F DRY BULB), 19.0°C WET BULB (66°F WET BULB) and outdoor air temperature of 35°C DRY BULB (95°F DRY BULB), 24°C WET BULB (75.2°F WET BULB)

Model			Indoor	CS-S18KKQ						CS-S24KKQ				
			Outdoor	CU-S18KKQ						CU-S24KKQ				
Performance Test Condition				JIS						JIS				
Power Supply			Phase, Hz	Single, 60Hz						Single, 60Hz				
			V	220			230			220			230	
				Min.	Mid.	Max.	Min.	Mid.	Max.	Min.	Mid.	Max.	Min.	Mid.	Max.
Cooling	Capacity		kW	0.90	5.20	6.00	0.90	5.20	6.00	0.90	6.00	7.10	0.90	6.00	7.10
			BTU/h	3070	17700	20500	3070	17700	20500	3070	20500	24200	3070	20500	24200
			kJ/h	3240	18720	21600	3240	18720	21600	3240	21600	25560	3240	21600	25560
	Running Current		A	-	6.4	-	-	6.3	-	-	7.7	-	-	7.4	-
	Input Power		W	240	1.38k	1.68k	240	1.38k	1.68k	310	1.65k	2.00k	310	1.65k	2.00k
	EER		W/W	3.75	3.77	3.57	3.75	3.77	3.57	2.90	3.64	3.55	2.90	3.64	3.55
			BTU/hW	12.79	12.83	12.20	12.79	12.83	12.20	9.90	12.42	12.10	9.90	12.42	12.10
			kJ/hW	13.5	13.6	12.9	13.5	13.6	12.9	10.5	13.1	12.8	10.5	13.1	12.8
	Power Factor		%	-	98	-	-	95	-	-	97	-	-	97	-
	Indoor Noise (H / L / QLo)		dB-A	45 / 36 / 33			45 / 36 / 33			46 / 37 / 34			46 / 37 / 34		
			Power Level dB	-			-			-			-		
	Outdoor Noise (H / L)		dB-A	49 / -			50 / -			49 / -			50 / -		
			Power Level dB	-			-			-			-		
Max Current (A) / Max Input Power (W)				8.8 / 1.85k						10 / 2.10k				
Starting Current (A)				6.4						7.7				
Compressor	Type			Hermetic Motor						Hermetic Motor				
	Motor Type			Induction (4-poles)						Induction (4-poles)				
	Output Power		W	900						900				
Indoor Fan	Type			Cross-Flow Fan						Cross-Flow Fan				
	Material			ASK30K1						ASK30K1				
	Motor Type			Transistor (8-poles)						Transistor (8-poles)				
	Input Power		W	-						-				
	Output Power		W	30						30				
	Speed	QLo	rpm	880 - 880						950 - 950				
		Lo	rpm	950 - 950						1020 - 1020				
		Me	rpm	1100 - 1100						1180 - 1180				
		Hi	rpm	1240 - 1240						1340 - 1340				
		SHi	rpm	1400 - 1400						1450 - 1450				
Outdoor Fan	Type			Propeller Fan						Propeller Fan				
	Material			PP Resin						PP Resin				
	Motor Type			Induction (6-poles)						Induction (6-poles)				
	Input Power		W	129 - 139						129 - 139				
	Output Power		W	66						66				
	Speed	Hi	rpm	750 - 780						750 - 780				
Moisture Removal			L/h (Pt/h)	2.9 (6.1)						3.3 (7.0)				
Indoor Airflow		QLo	m^3/min (ft^3/min)	12.8 (454) - 12.8 (454)						13.1 (463) - 13.1 (463)				
		Lo	m^3/min (ft^3/min)	13.9 (490) - 13.9 (490)						14.1 (497) - 14.1 (497)				
		Me	m^3/min (ft^3/min)	16.1 (567) - 16.1 (567)						16.3 (575) - 16.3 (575)				
		Hi	m^3/min (ft^3/min)	18.1 (640) - 18.1 (640)						18.5 (650) - 18.5 (650)				
		SHi	m^3/min (ft^3/min)	20.4 (722) - 20.4 (722)						20.0 (707) - 20.0 (707)				
Outdoor Airflow		Hi	m^3/min (ft^3/min)	38.5 (1360) - 40.3 (1420)						38.5 (1360) - 40.3 (1420)				
Refrigeration Cycle	Control Device			Capillary Tube						Capillary Tube				
	Refrigerant Oil		cm^3	RB68A or Freol Alpha68M (400)						RB68A or Freol Alpha68M (400)				
	Refrigerant Type		g (oz)	R410A, 1.13k (39.9)						R410A, 1.13k (46.9)				

Dimension	Height(I/D / O/D)	mm (inch)	290 (11-7/16)	750 (29-17/32)	290 (11-7/16)	750 (29-17/32)
	Width (I/D / O/D)	mm (inch)	1070 (42-5/32)	875 (34-15/32)	1070 (42-5/32)	875 (34-15/32)
	Depth (I/D / O/D)	mm (inch)	235 (9-9/32)	345 (13-19/32)	235 (9-9/32)	345 (13-19/32)
Weight	Net (I/D / O/D)	kg (lb)	12 (26)	46 (101)	12 (26)	48 (106)
Piping	Pipe Diameter (Liquid / Gas)	mm (inch)	6.35 (1/4) / 12.7 (1/2)		6.35 (1/4) / 15.9 (5/8)	
	Standard length	m (ft)	5 (16.4)		5 (16.4)	
	Length range (min – max)	m (ft)	3 (9.8) ~ 20 (65.6)		3 (9.8) ~ 20 (65.6)	
	I/D & O/D Height different	m (ft)	15 (49.2)		15 (49.2)	
	Additional Gas Amount	g/m (oz/ft)	15 (0.2)		20 (0.2)	
	Length for Additional Gas	m (ft)	10 (32.8)		10 (32.8)	
Drain Hose	Inner Diameter	mm	16		16	
	Length	mm	550		550	
Indoor Heat Exchanger	Fin Material		Pre Coat		Pre Coat	
	Fin Type		Slit Fin		Slit Fin	
	Row x Stage x FPI		2 x 15 x 21		2 x 15 x 21	
	Size (W x H x L)	mm	810 x 315 x 25.4		810 x 315 x 25.4	
Outdoor Heat Exchanger	Fin Material		Blue Coated		Blue Coated	
	Fin Type		Slit Fin		Slit Fin	
	Row x Stage x FPI		2 x 34 x 17		2 x 34 x 17	
	Size (W x H x L)	mm	24.5 x 714.0 x 826.2:846.2		24.5 x 714.0 x 826.2:846.2	
Air Filter	Material		Polypropelene		Polypropelene	
	Type		One-touch		One-touch	
Power Supply			Indoor		Indoor	
Power Supply Cord		A	15		20	
Thermostat			-		-	
Protection Device			-		-	
			Dry Bulb	Wet Bulb	Dry Bulb	Wet Bulb
Indoor Operation Range		Maximum	32	23	32	23
		Minimum	16	11	16	11
Outdoor Operation Range		Maximum	43	26	43	26
		Minimum	16	11	16	11

1. Cooling capacities are based on indoor temperature of 27°C DRY BULB (80.6°F DRY BULB), 19.0°C WET BULB (66°F WET BULB) and outdoor air temperature of 35°C DRY BULB (95°F DRY BULB), 24°C WET BULB (75.2°F WET BULB)
2. Specifications are subjected to change without prior notice for further improvement.

3 Location of Controls and Components

3.1 Indoor Unit

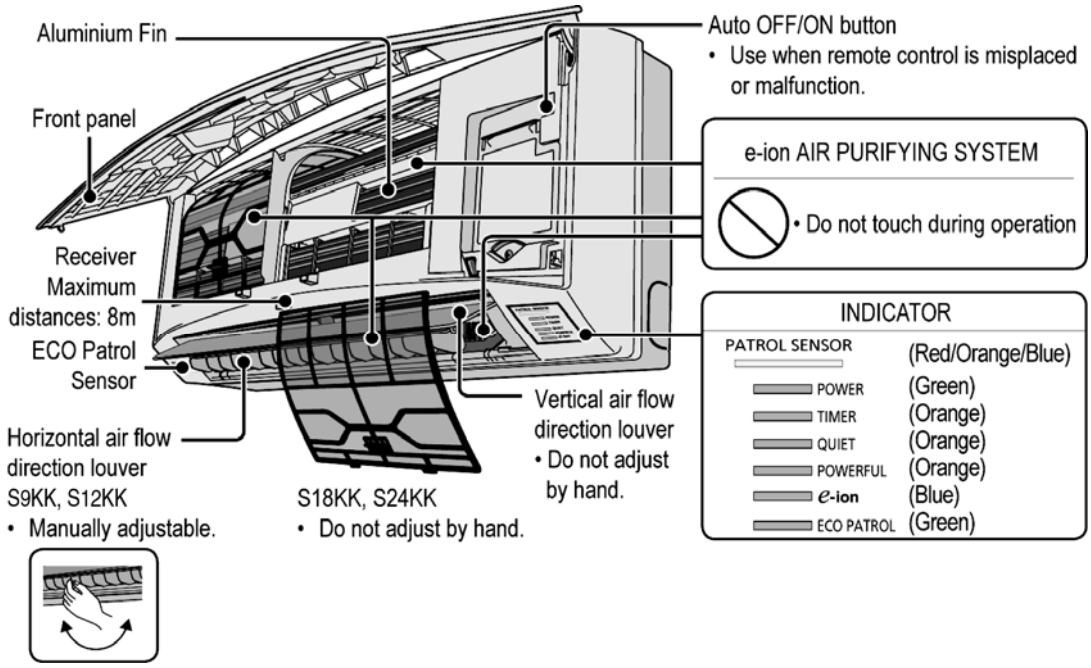

3.2 Outdoor Unit

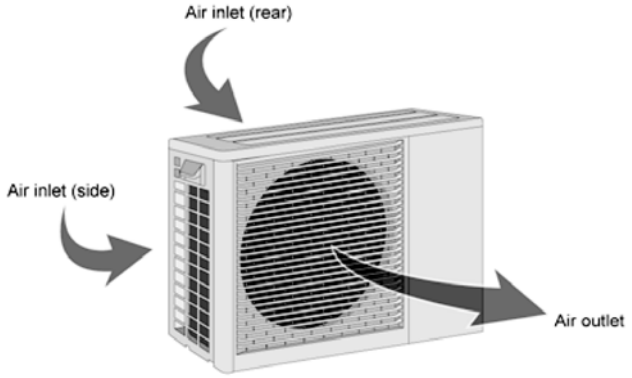

3.3 Remote Control

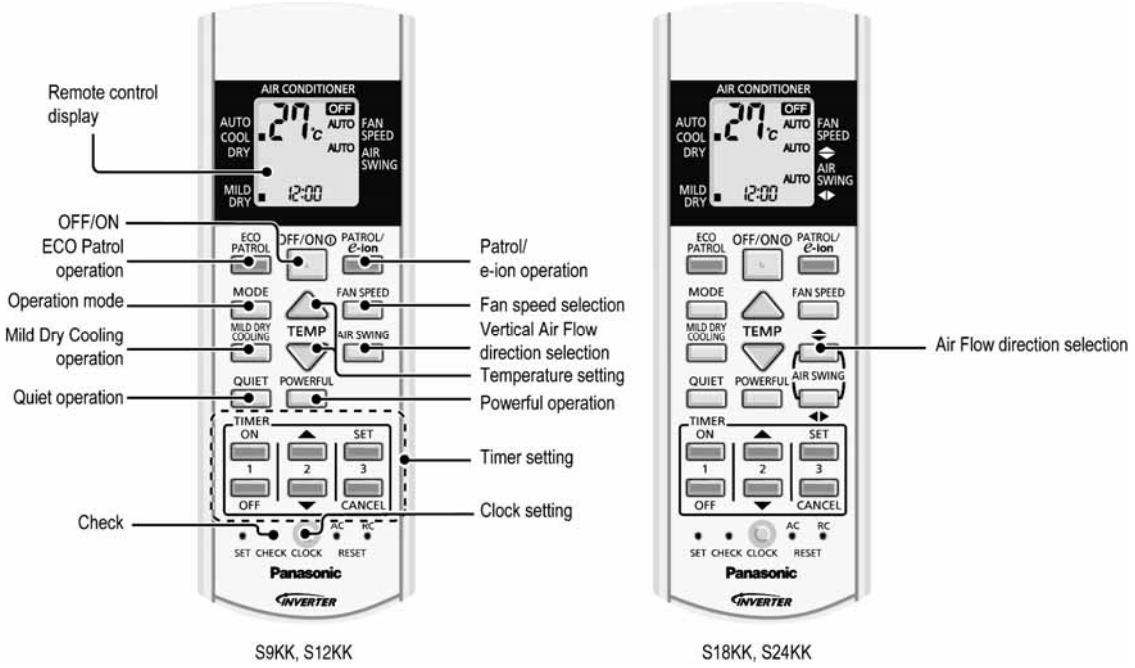

4 Dimensions

4.1 Indoor Unit

4.1.1 CS-S9KKQ CS-S12KKQ

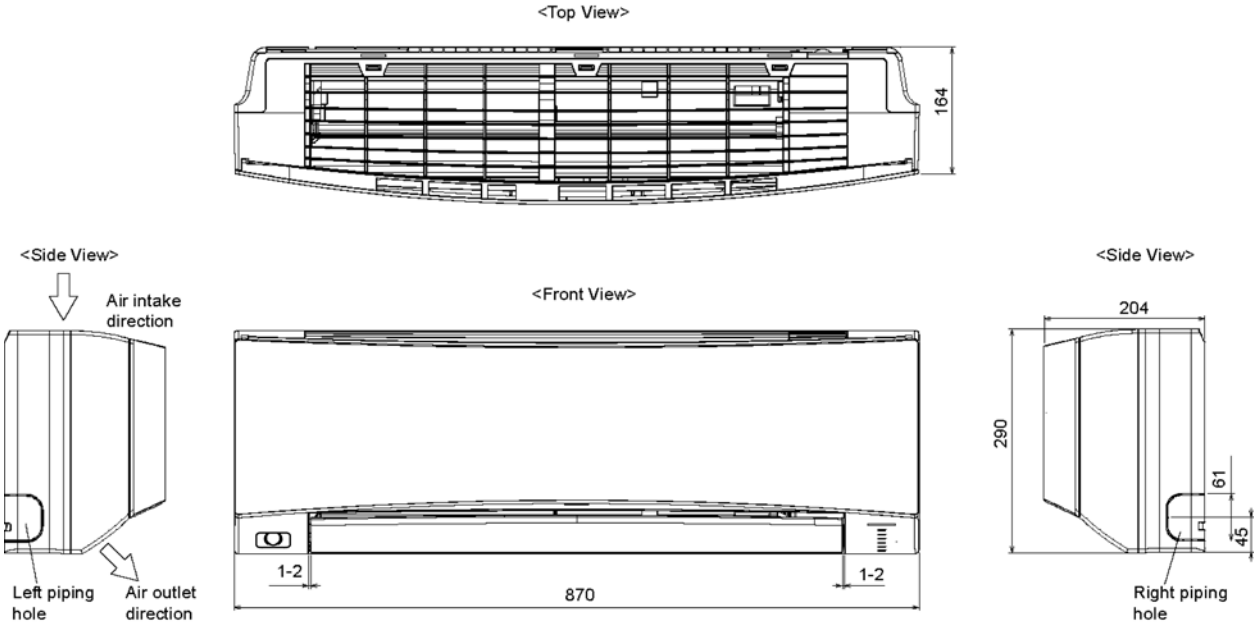

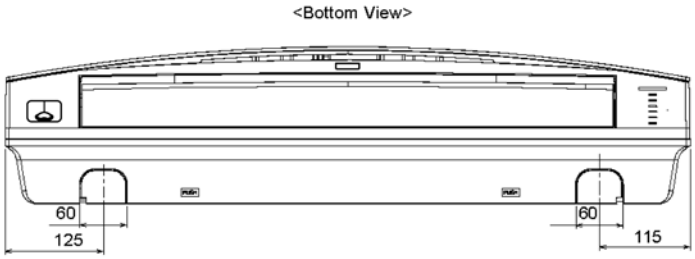

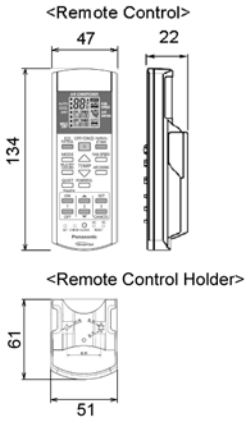

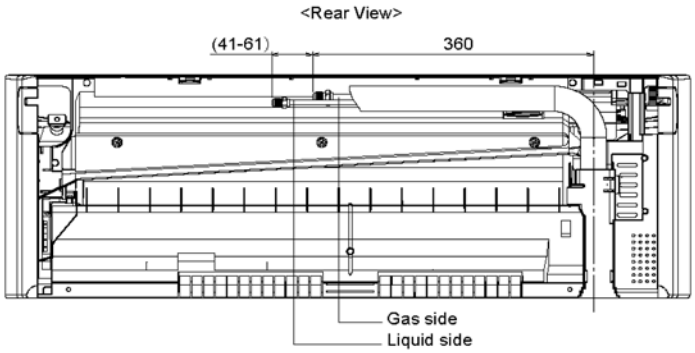

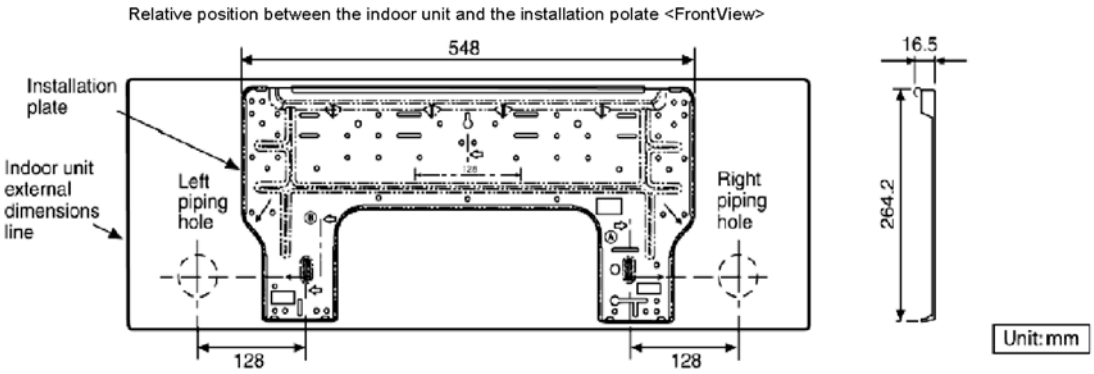

4.1.2 CS-S18KKQ CS-S24KKQ

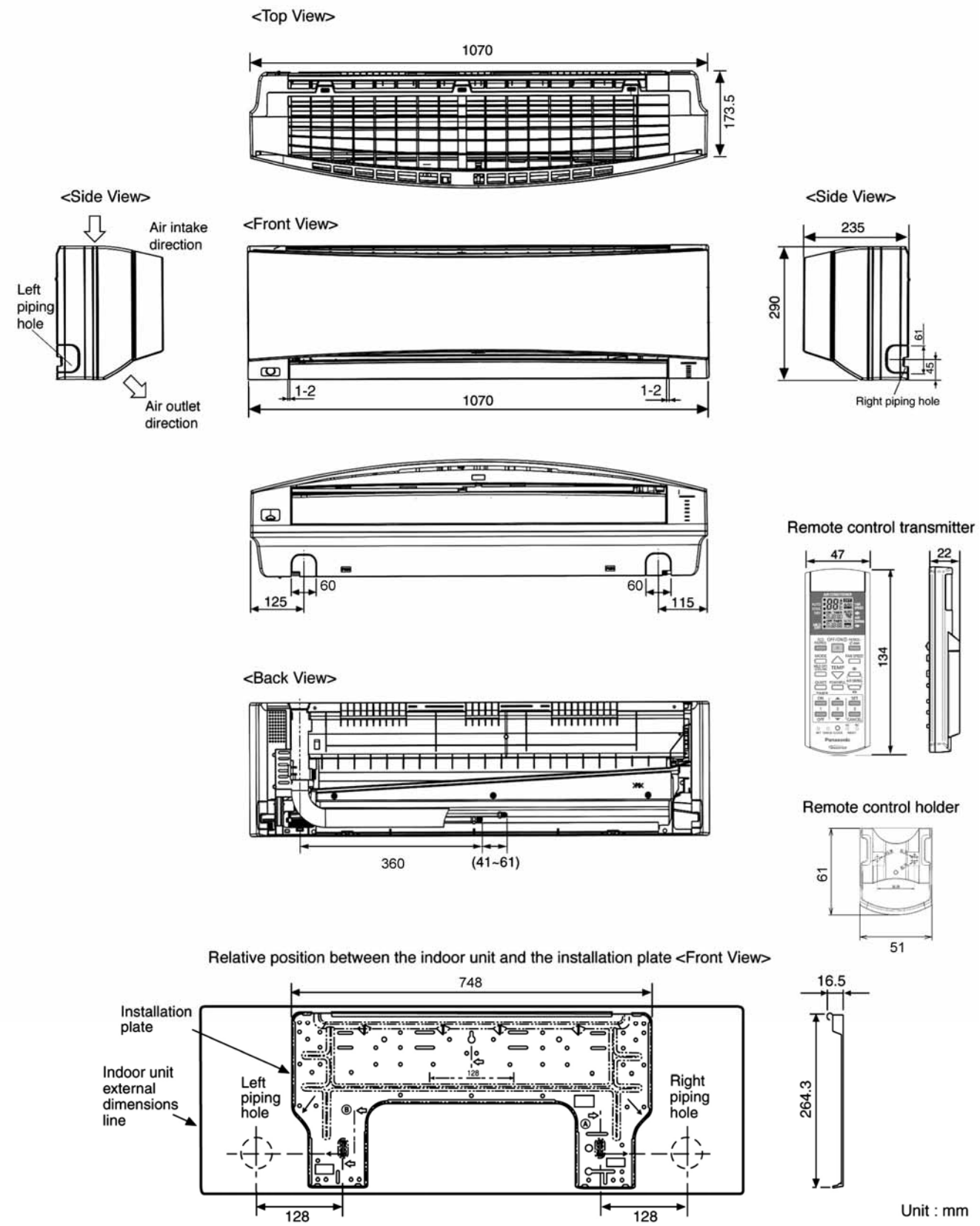

4.2 Outdoor Unit

4.2.1 CU-S9KKQ

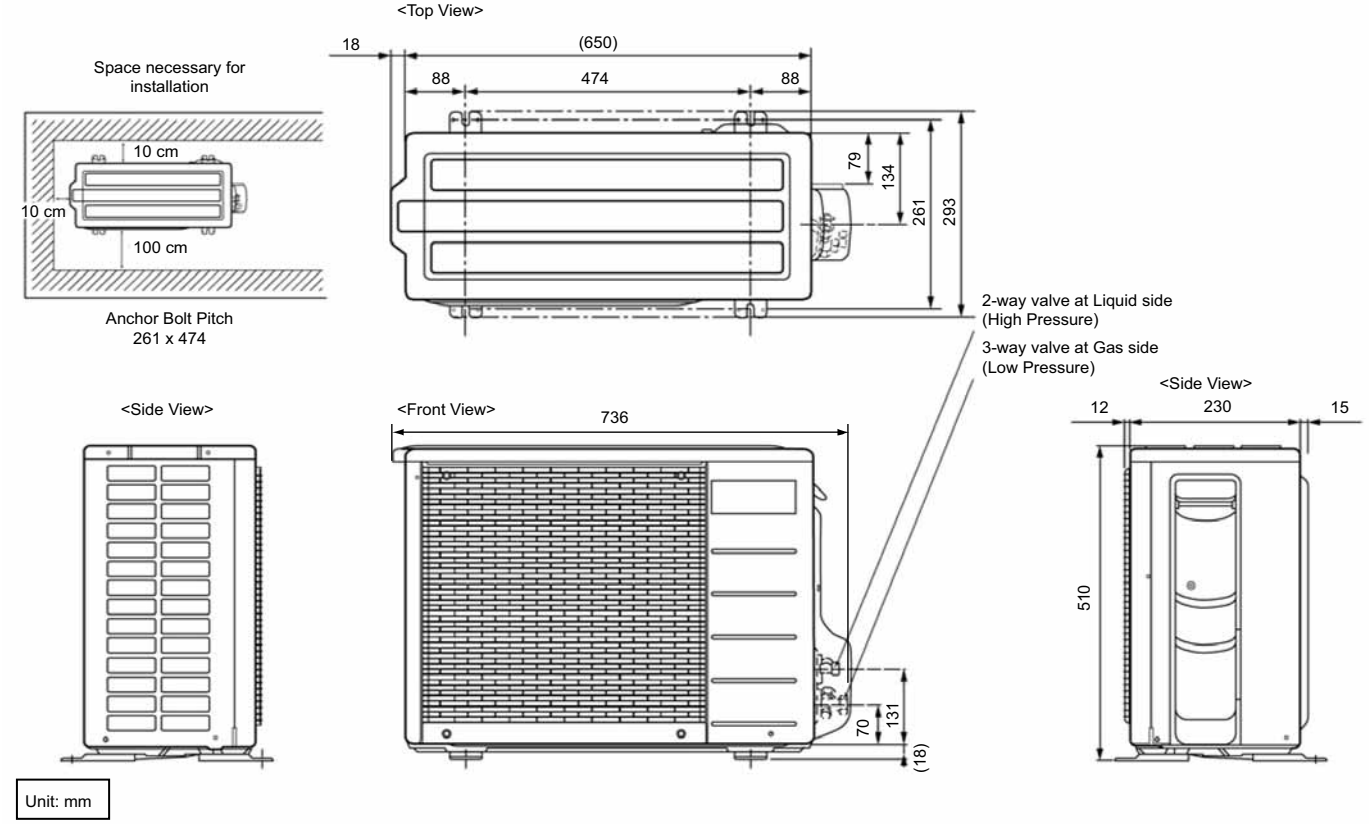

4.2.2 CU-S12KKQ

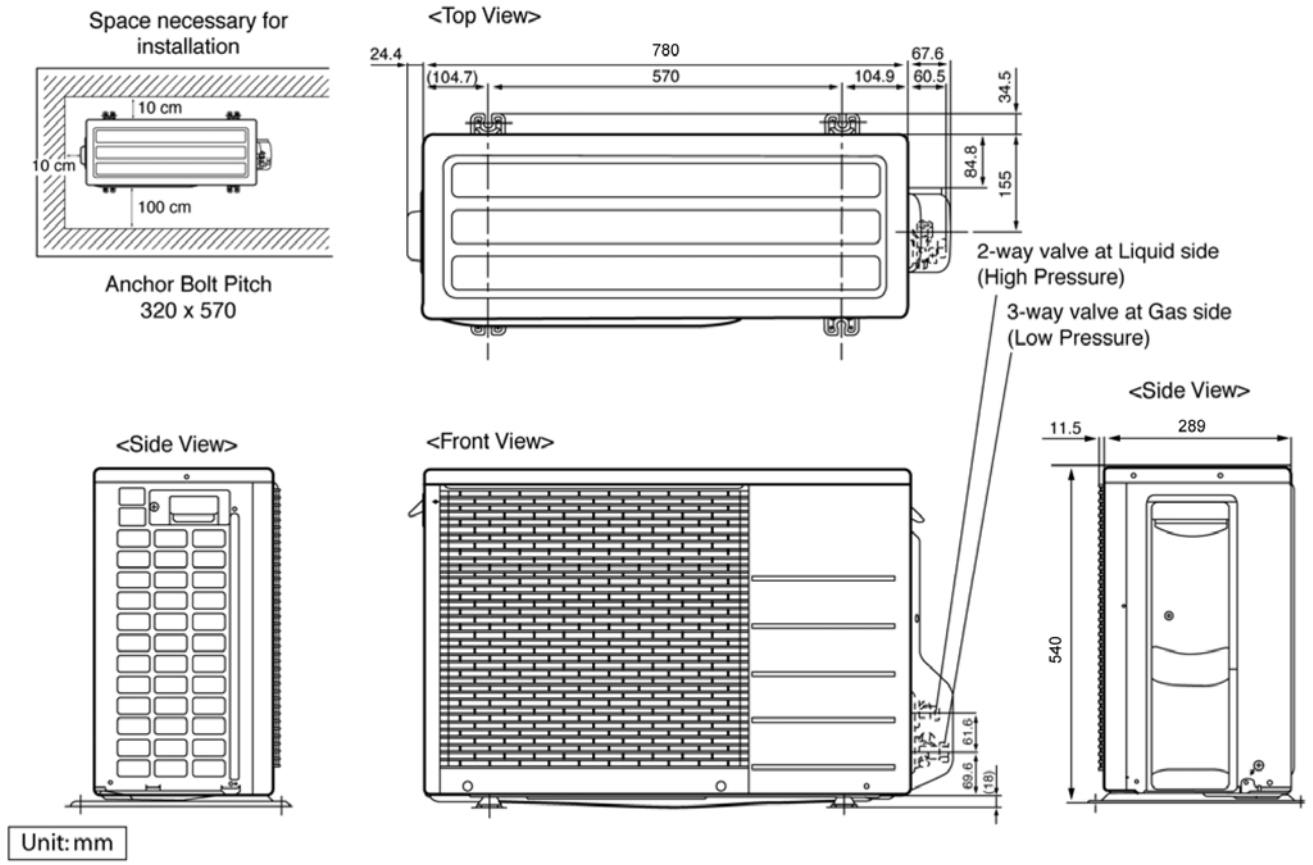

4.2.3 CU-S18KKQ CU-S24KKQ

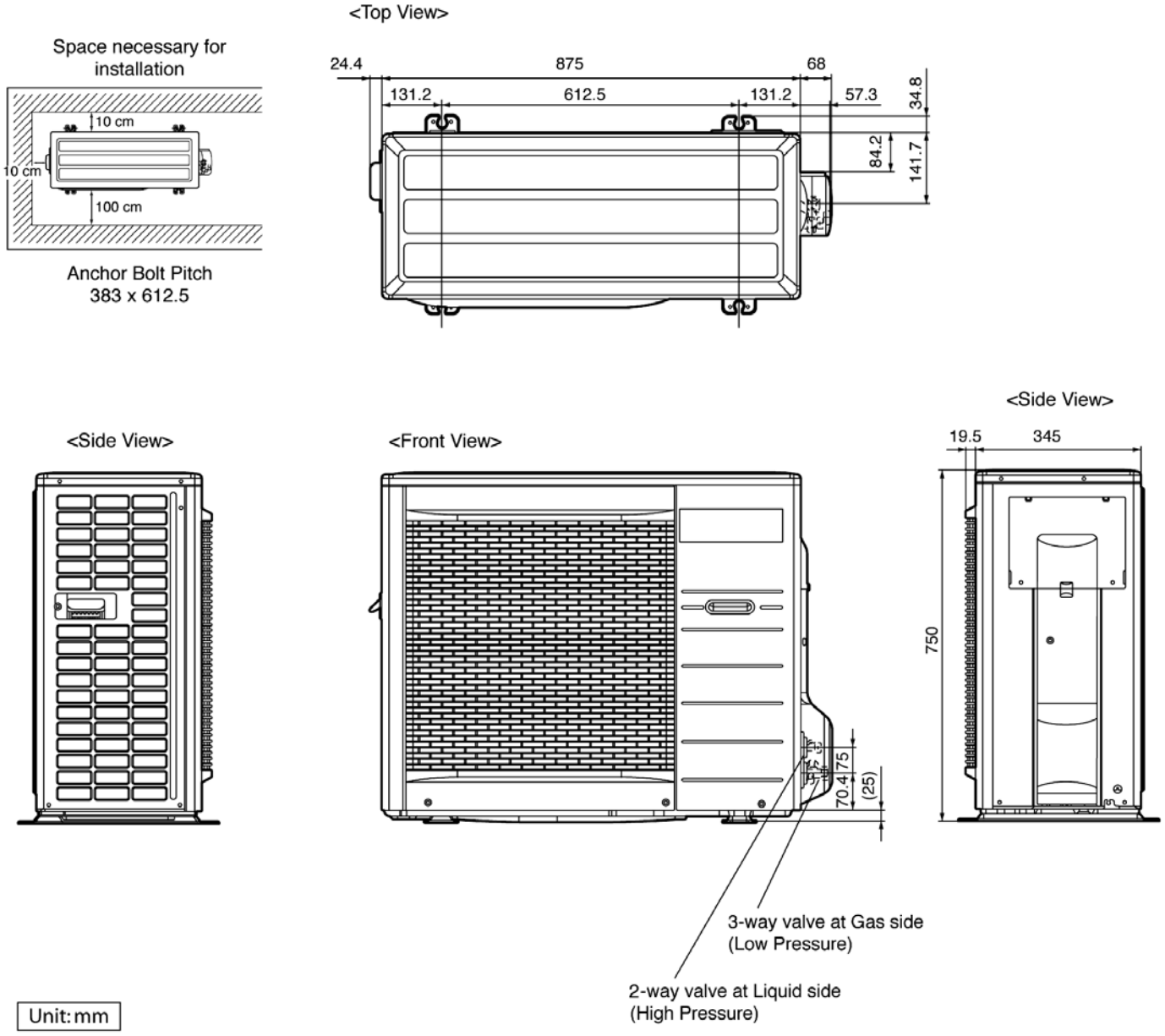

5 Refrigeration Cycle Diagram

5.1 CS-S9KKQ CS-S12KKQ

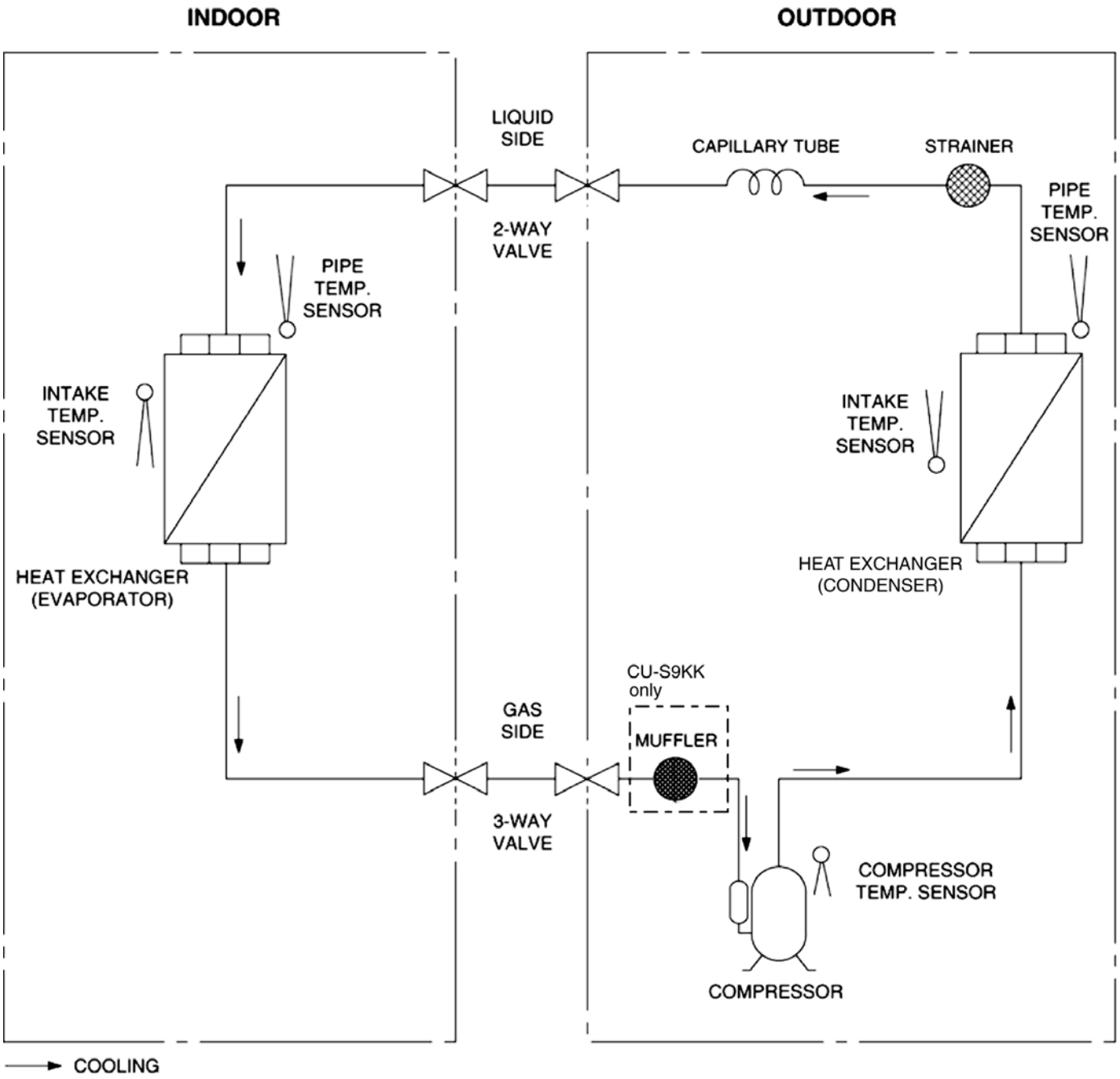

5.2 CS-S18KKQ CS-S24KKQ

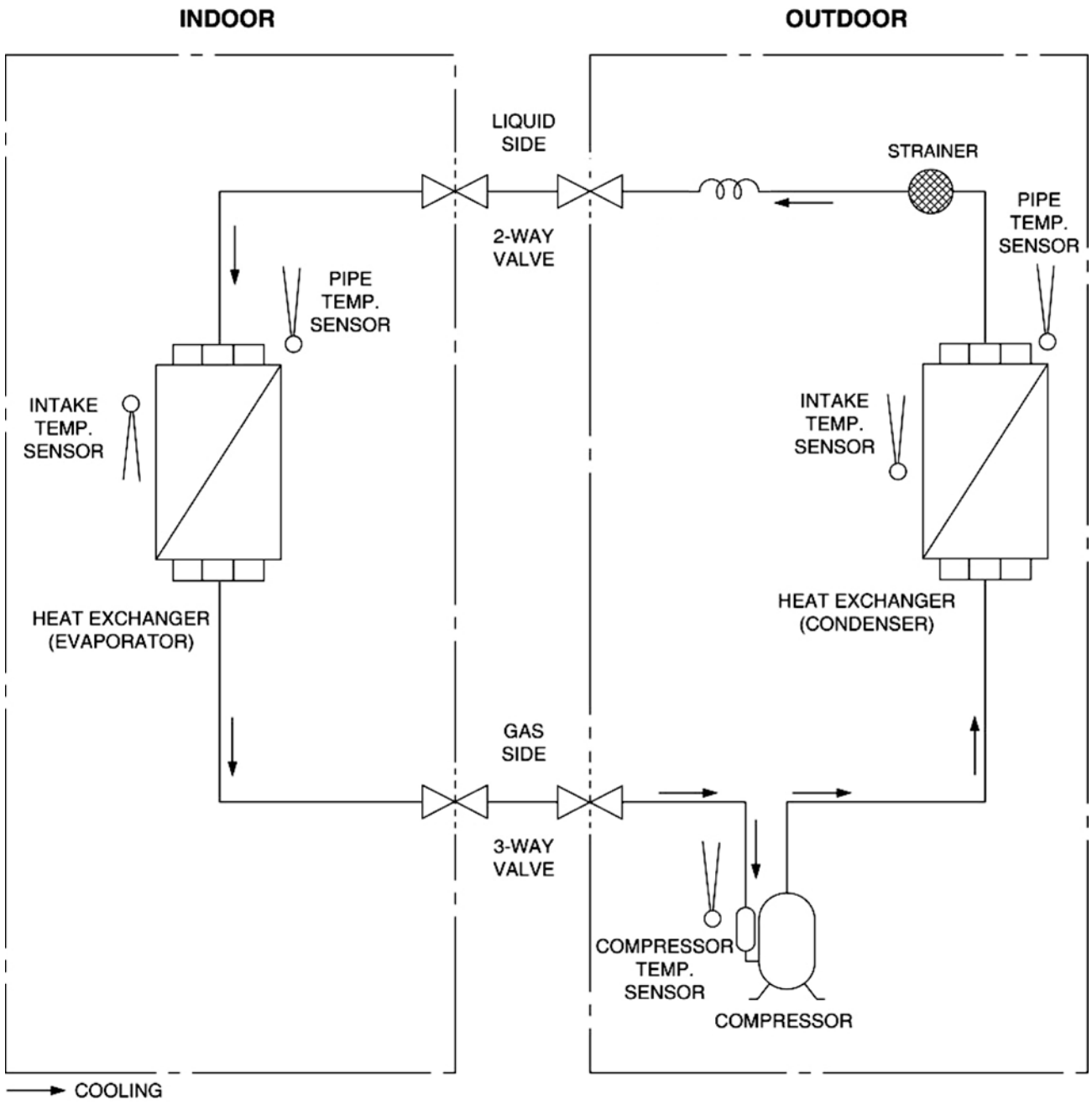

6 Block Diagram

6.1 CS-S9KKQ CU-S9KKQ

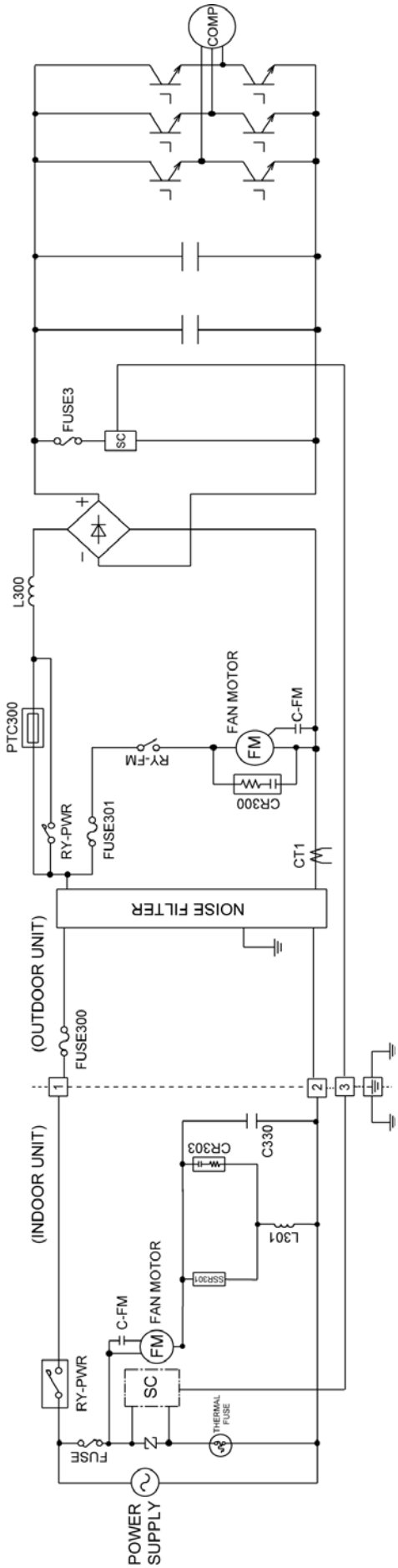

6.2 CS-S12KKQ CU-S12KKQ

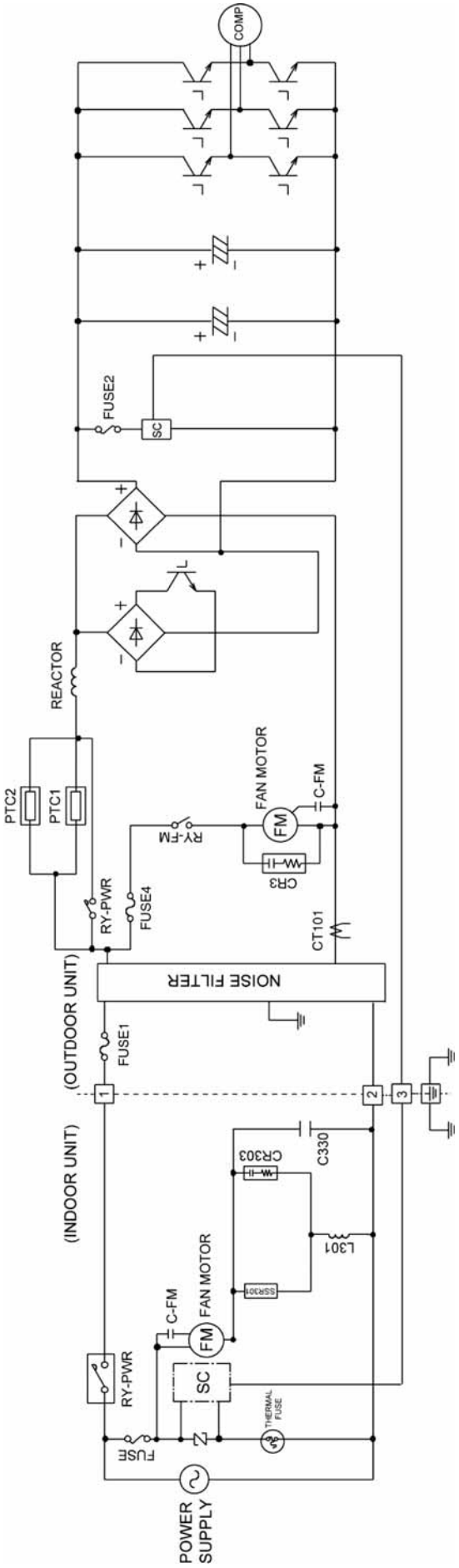

6.3 CS-S18KKQ CU-S18KKQ CS-S24KKQ CU-S24KKQ

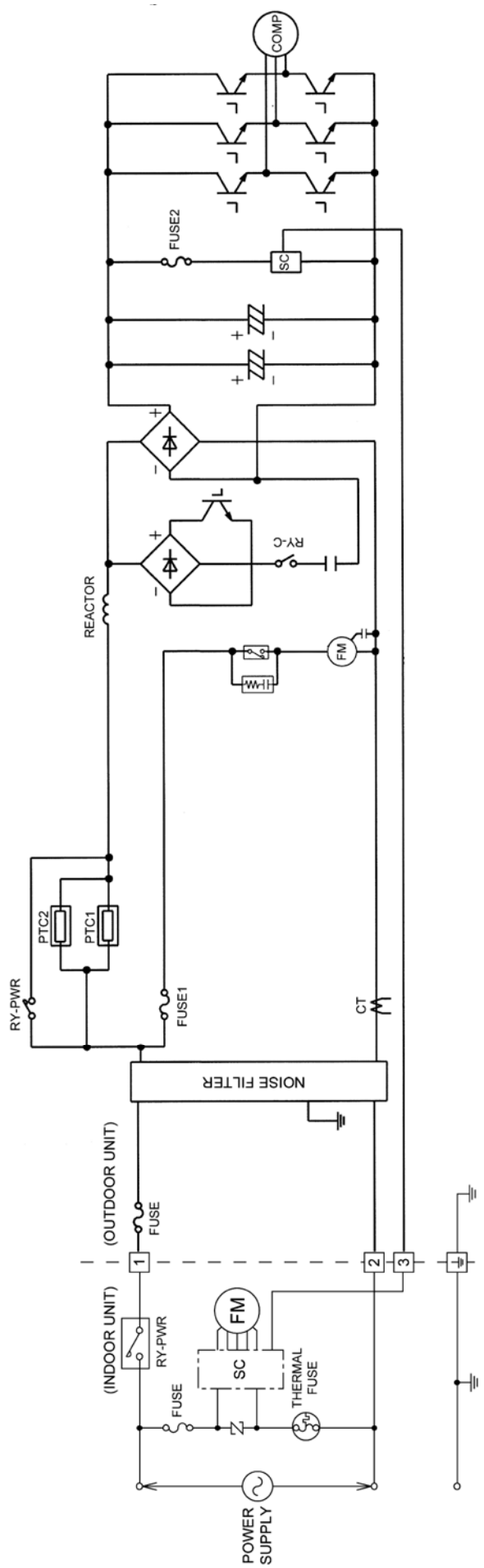

7 Wiring Connection Diagram

7.1 Indoor Unit

7.1.1 CS-S9KKQ CS-S12KKQ

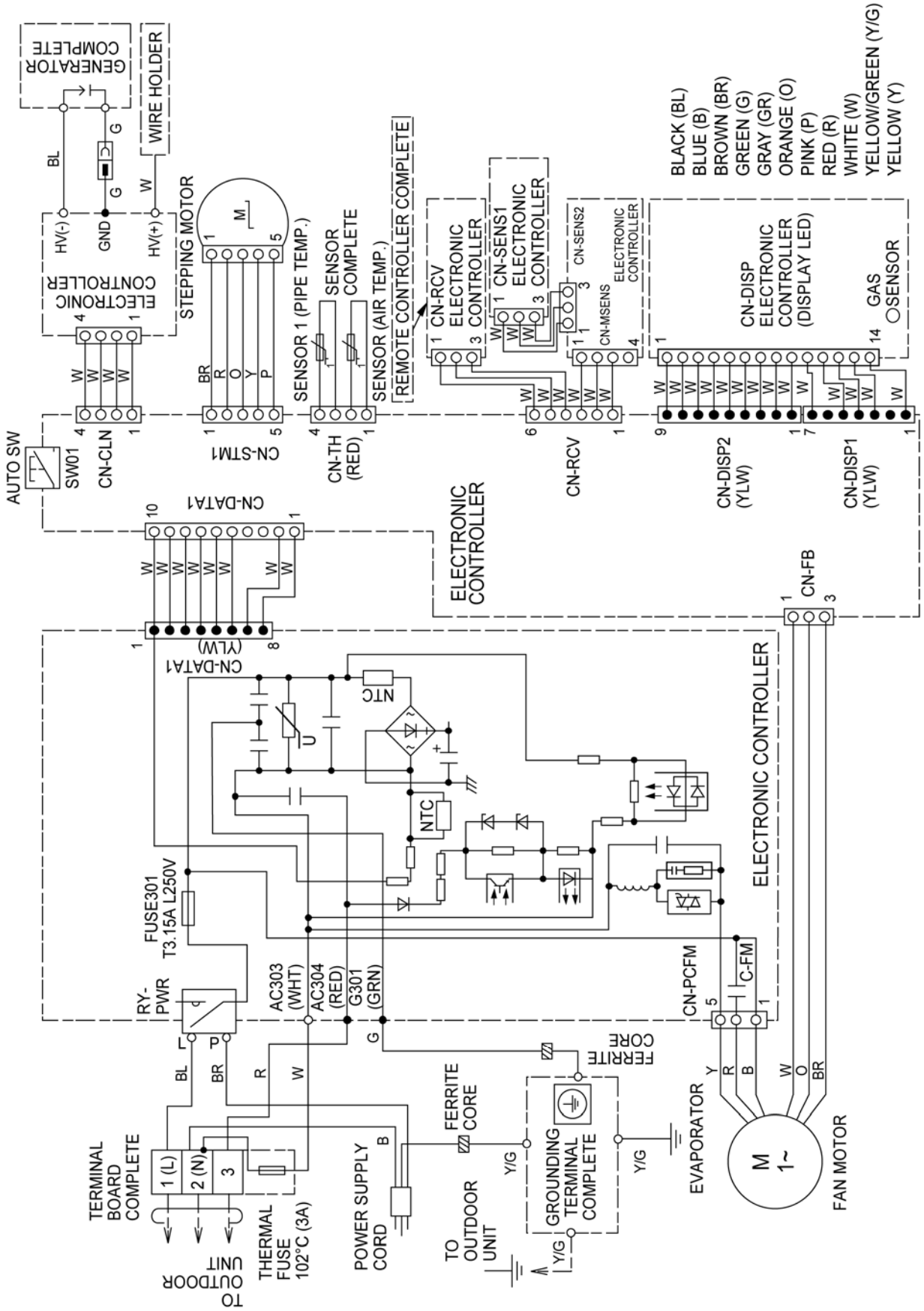

7.1.2 CS-S18KKQ CS-S24KKQ

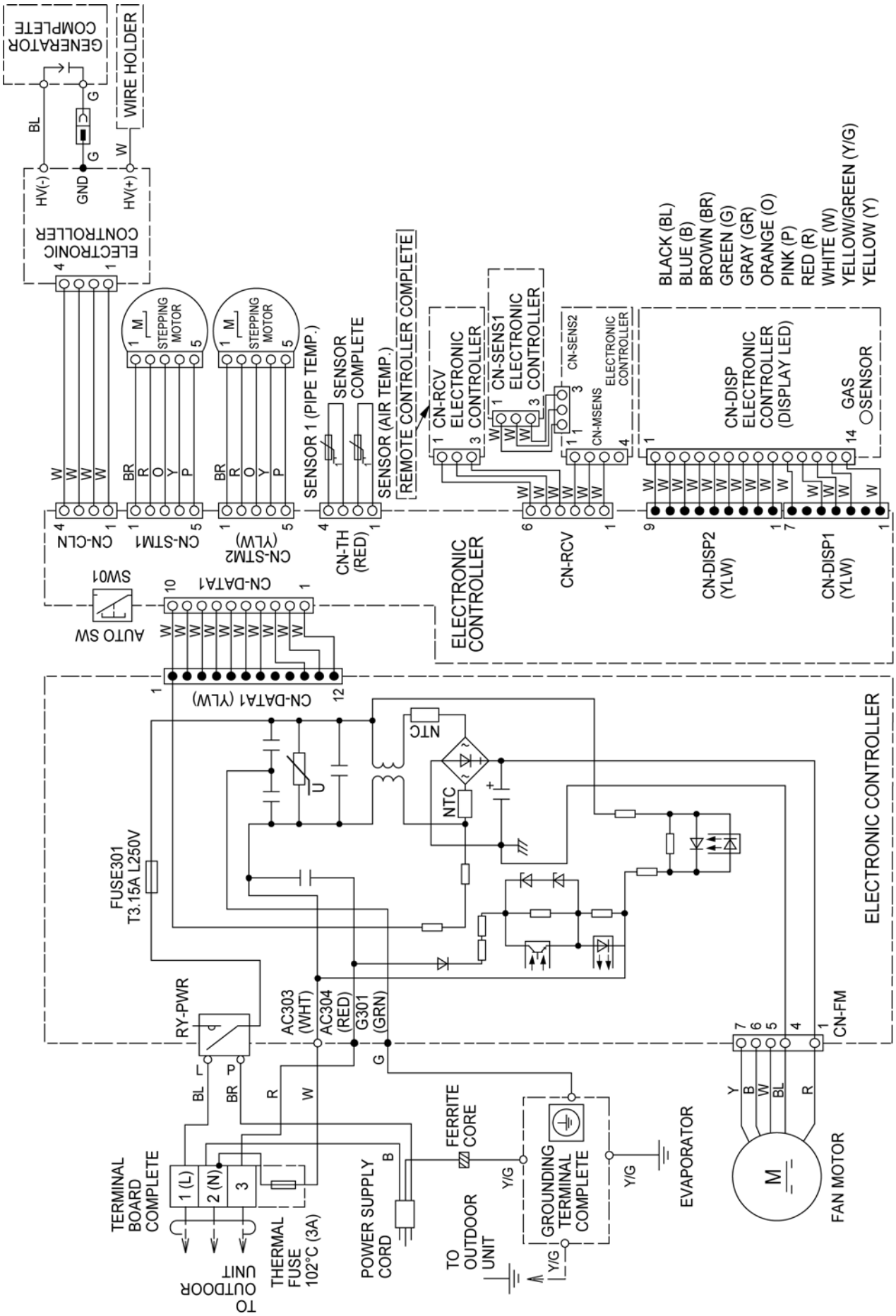

7.2 Outdoor Unit

7.2.1 CU-S9KKQ

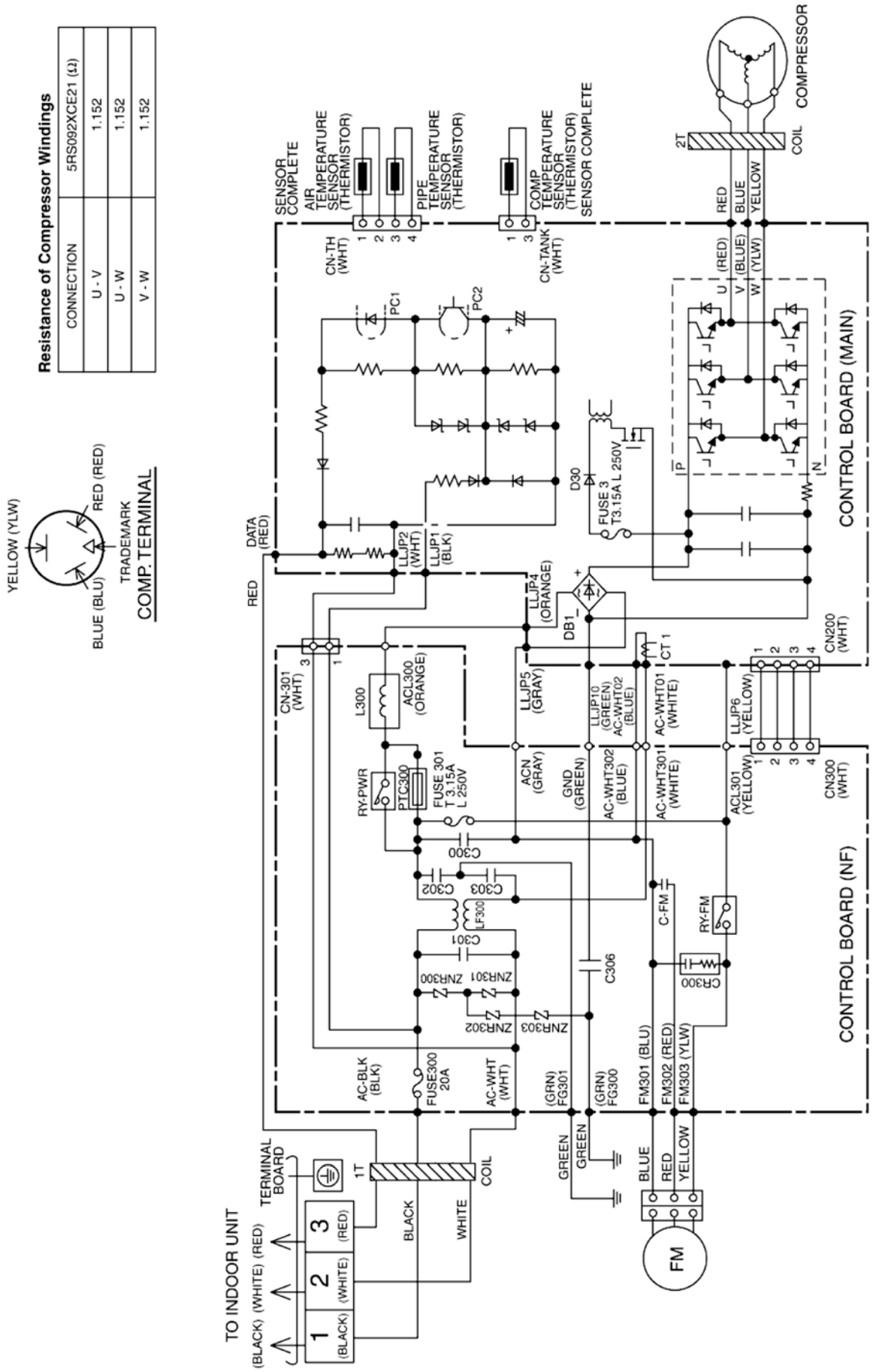

7.2.2 CU-S12KKQ

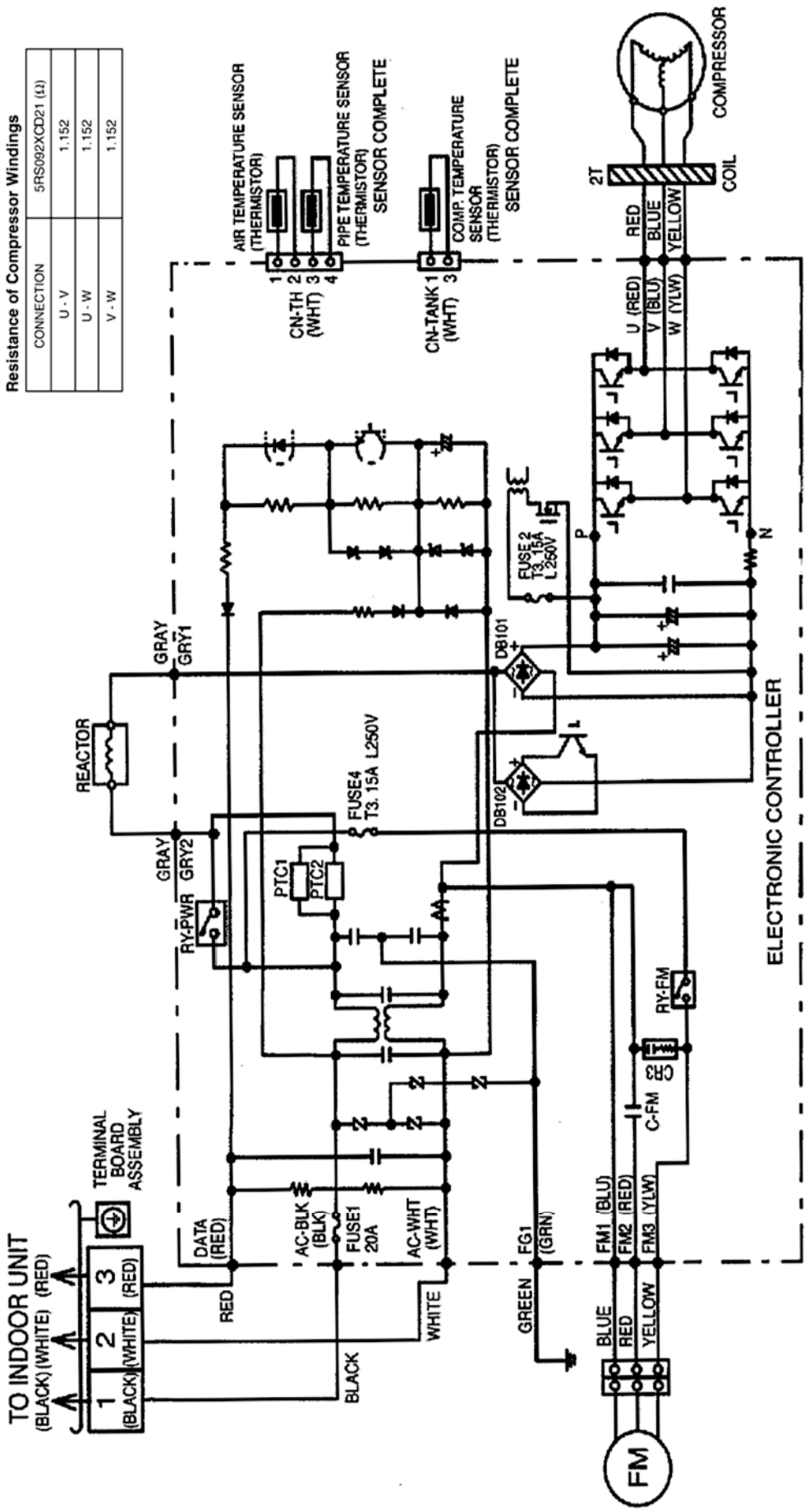

7.2.3 CU-S18KKQ CU-S24KKQ

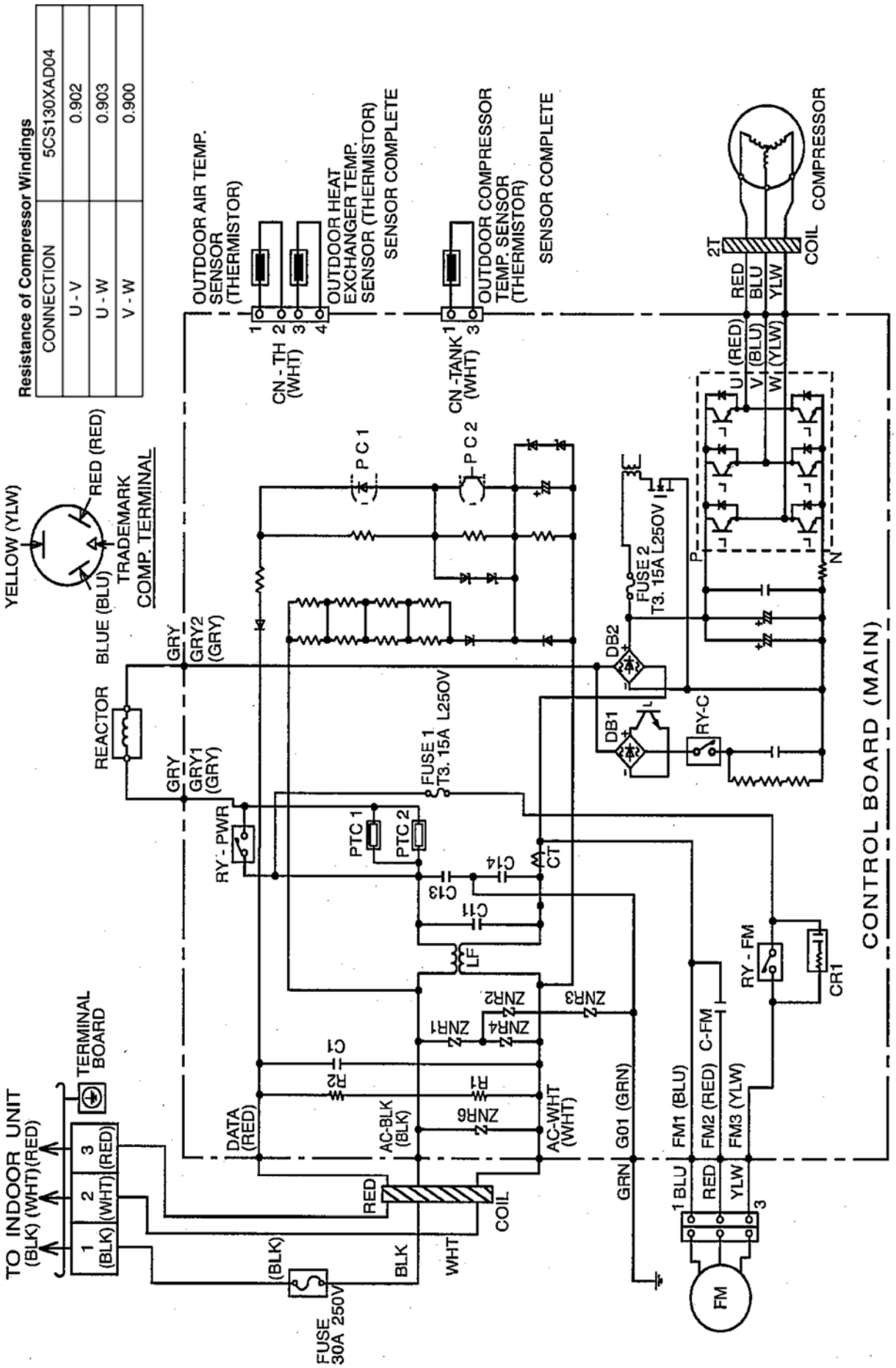

8 Electronic Circuit Diagram

8.1 Indoor Unit

8.1.1 CS-S9KKQ CS-S12KKQ

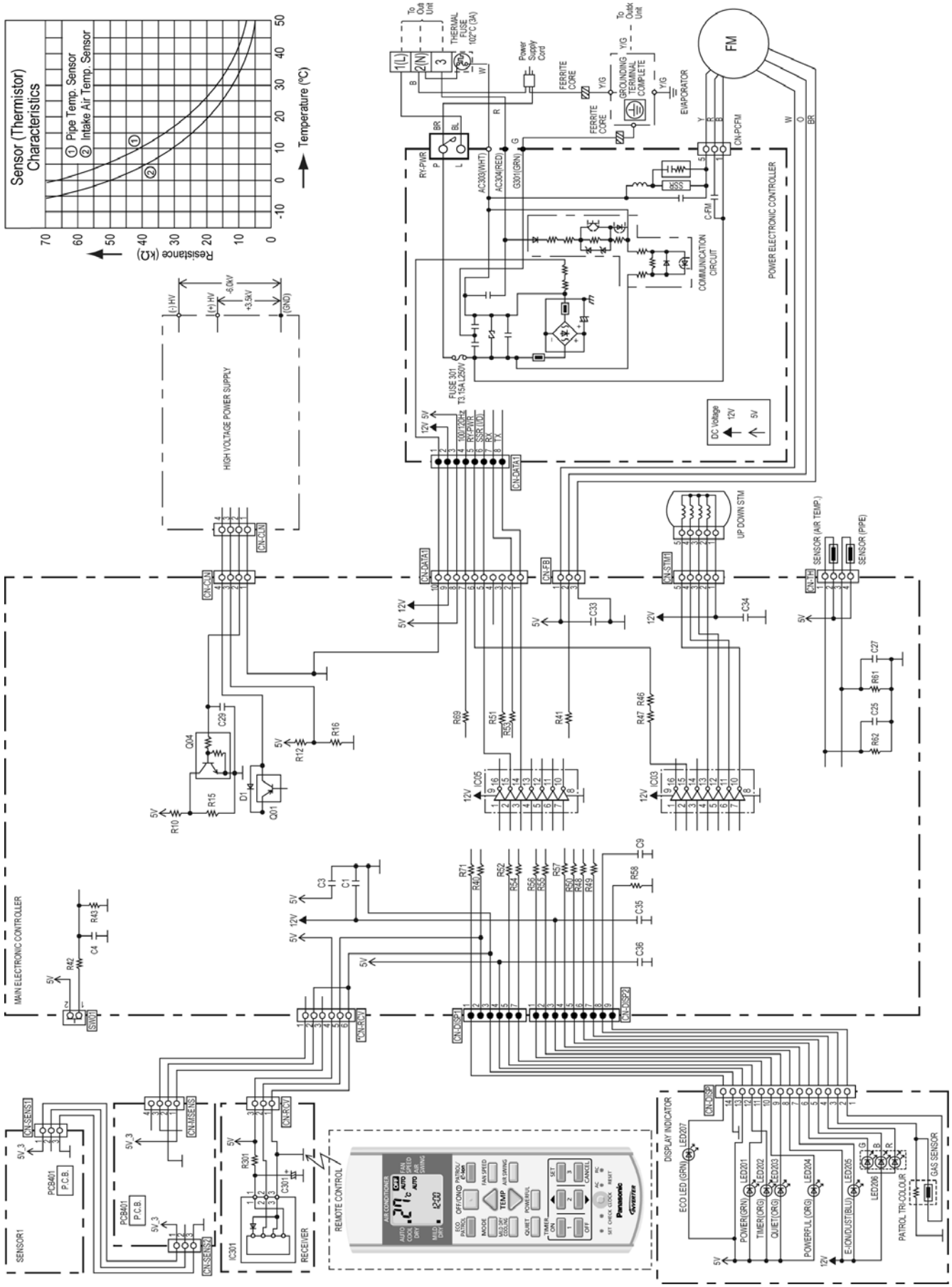

8.1.2 CS-S18KKQ CS-S24KKQ

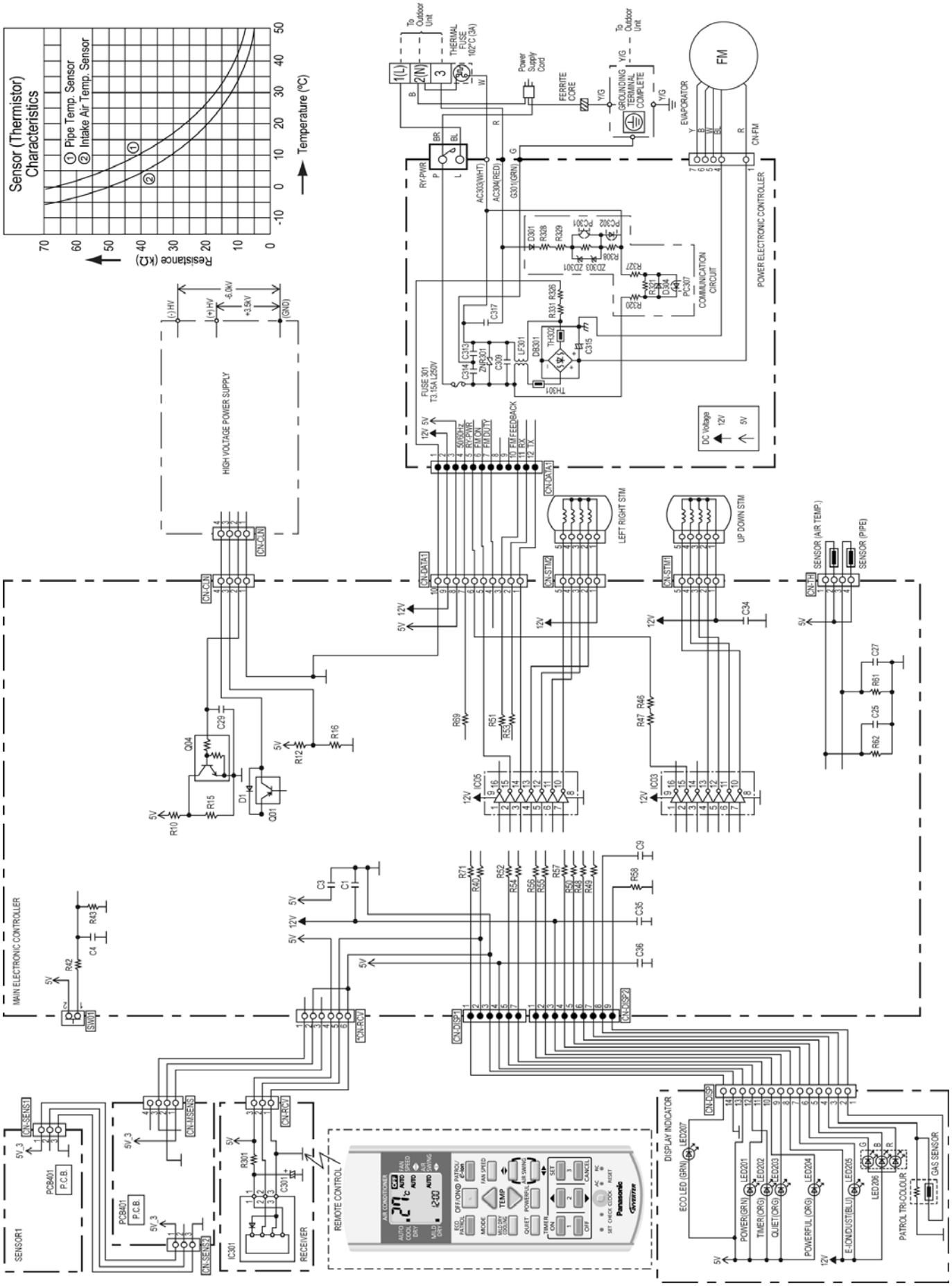

8.2 Outdoor Unit

8.2.1 CU-S9KKQ

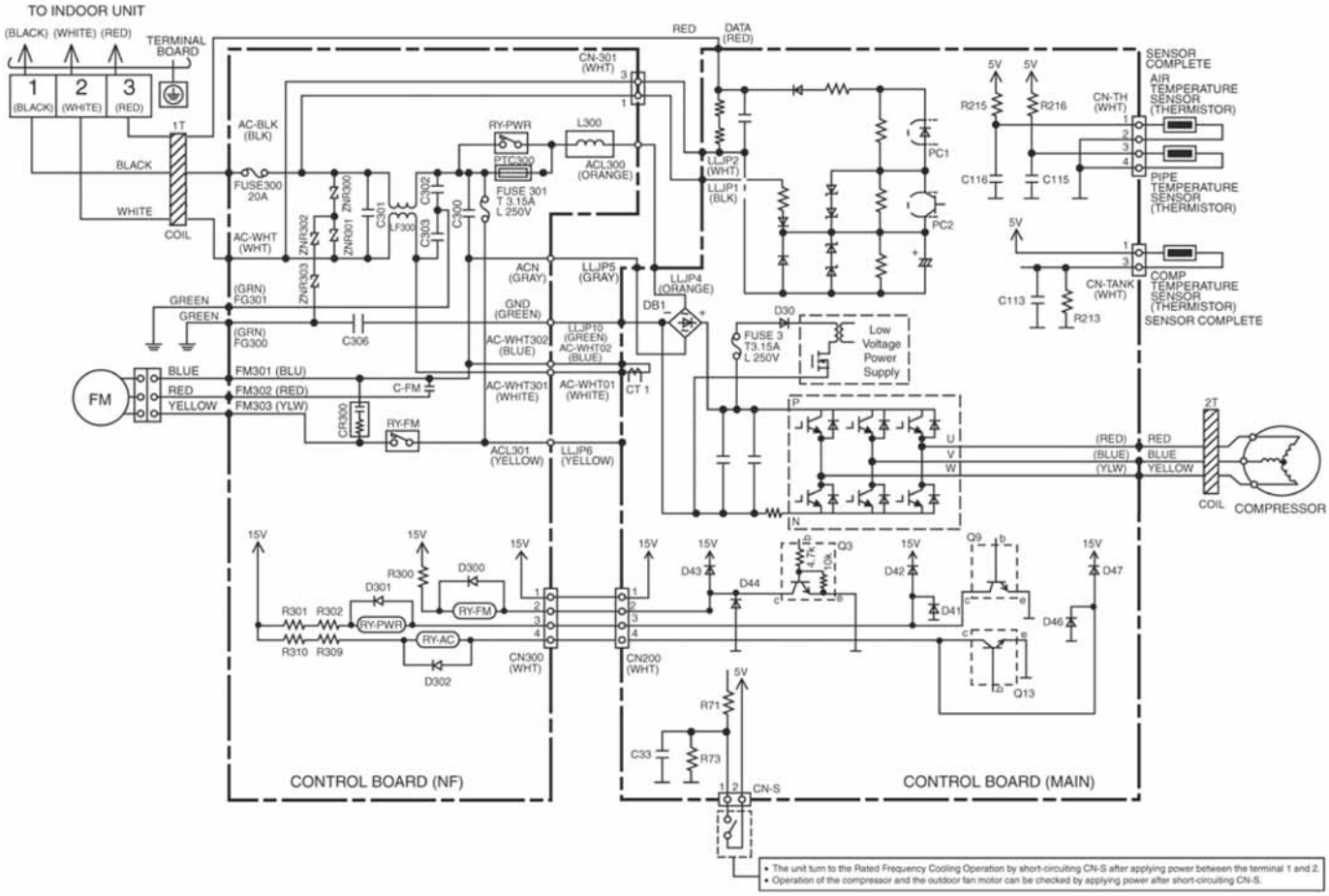

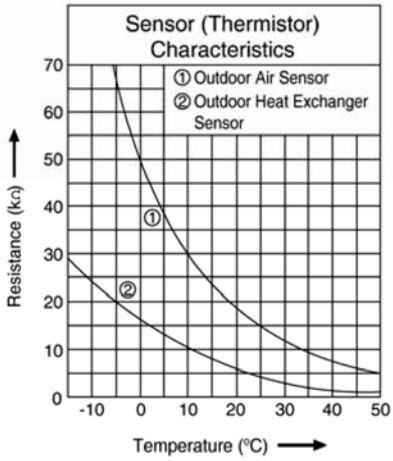

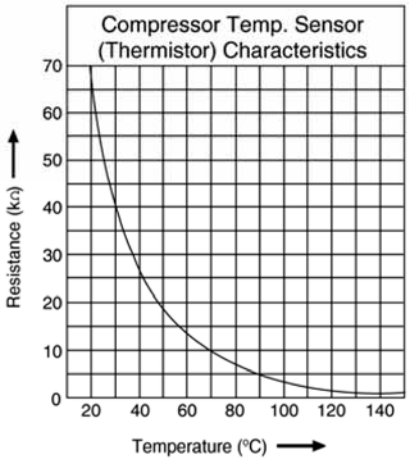

8.2.2 CU-S12KKQ

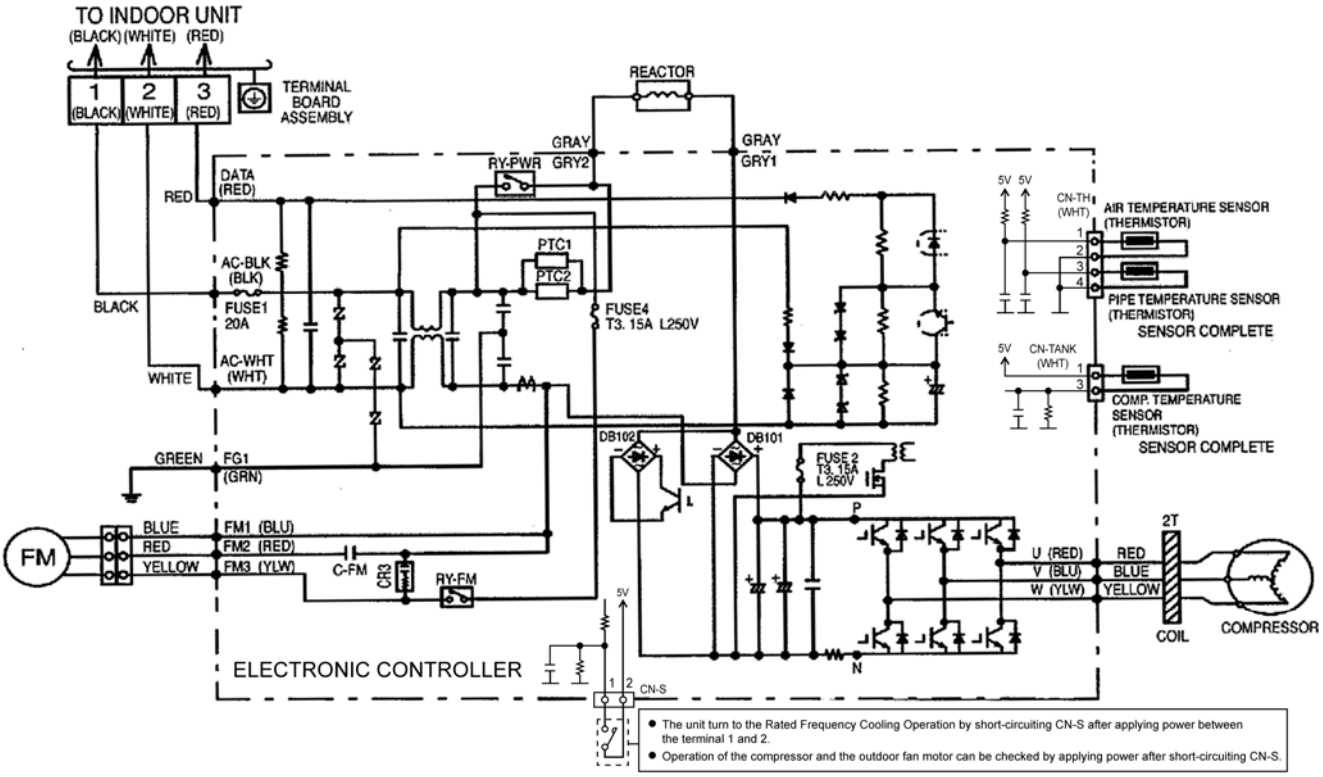

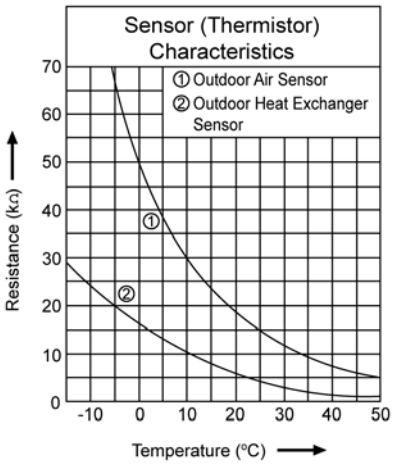

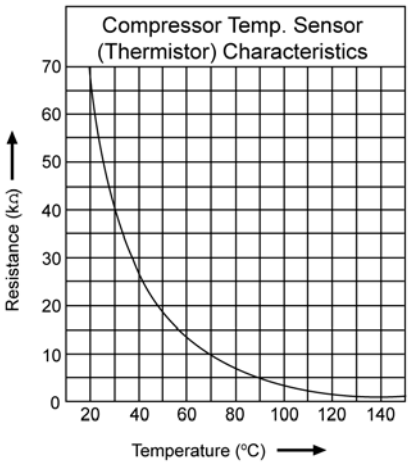

8.2.3 CU-S18KKQ CU-S24KKQ

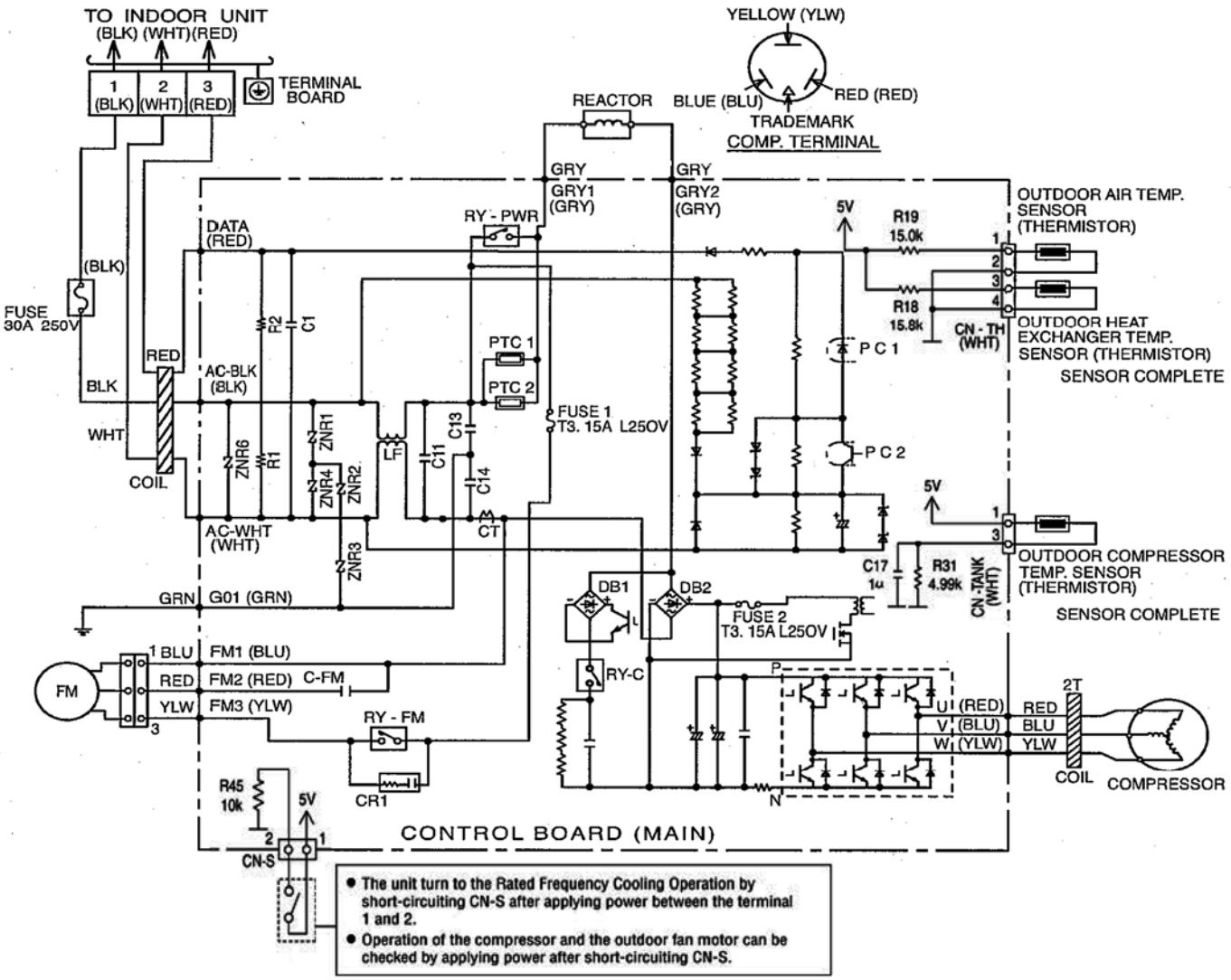

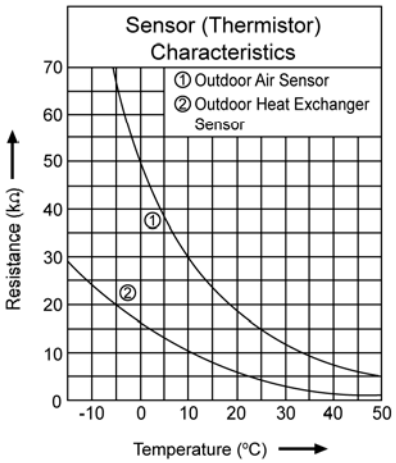

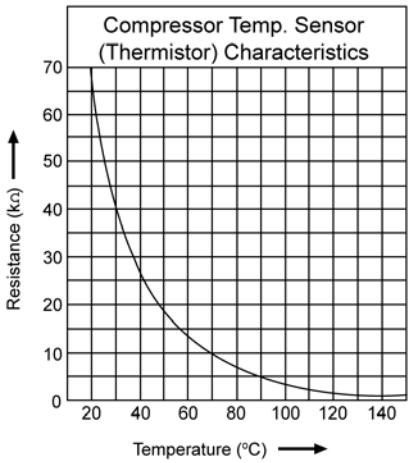

9 Printed Circuit Board

9.1 Indoor Unit

9.1.1 Main Printed Circuit Board

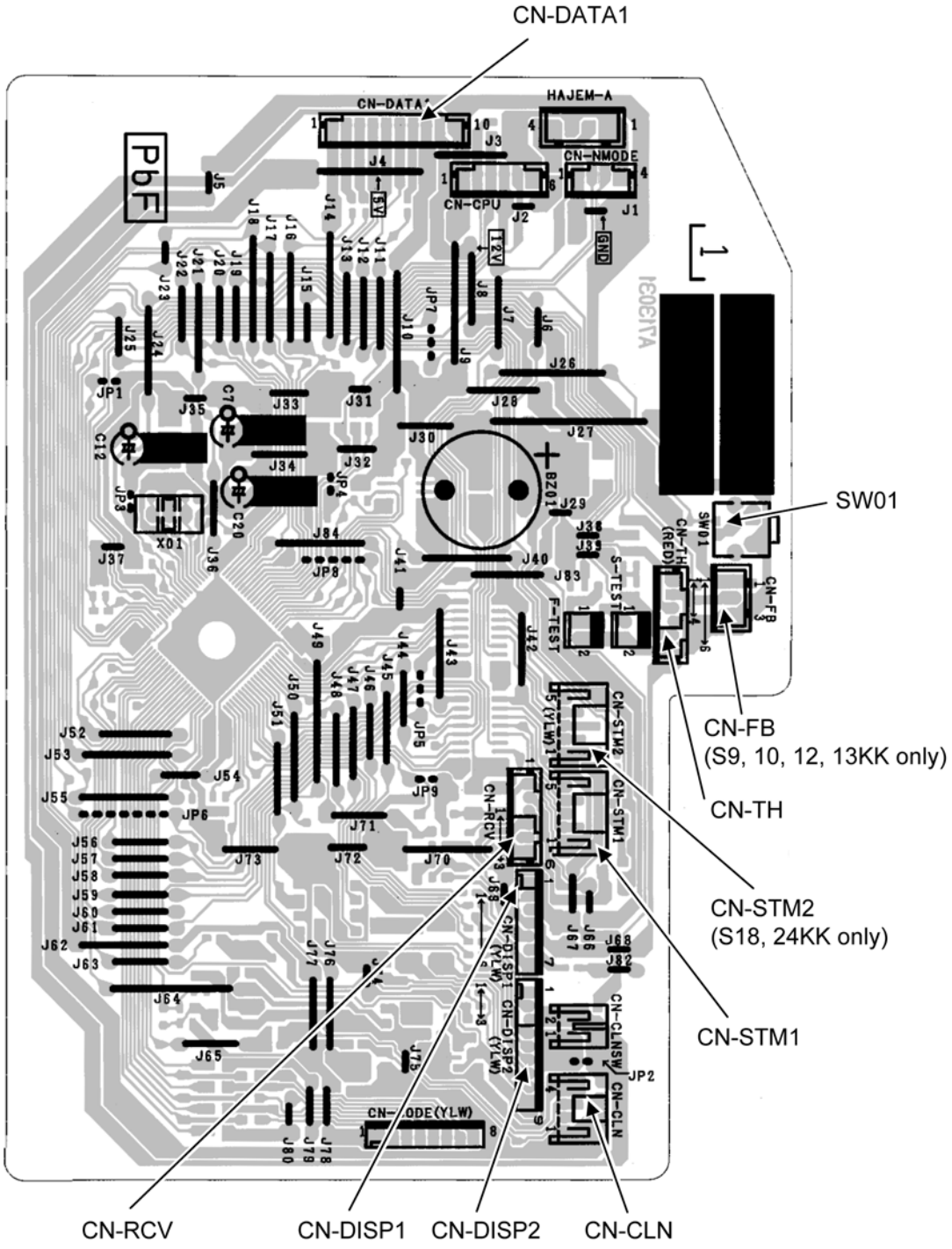

9.1.2 Power Printed Circuit Board

9.1.2.1 CS-S9KK CS-S12KK

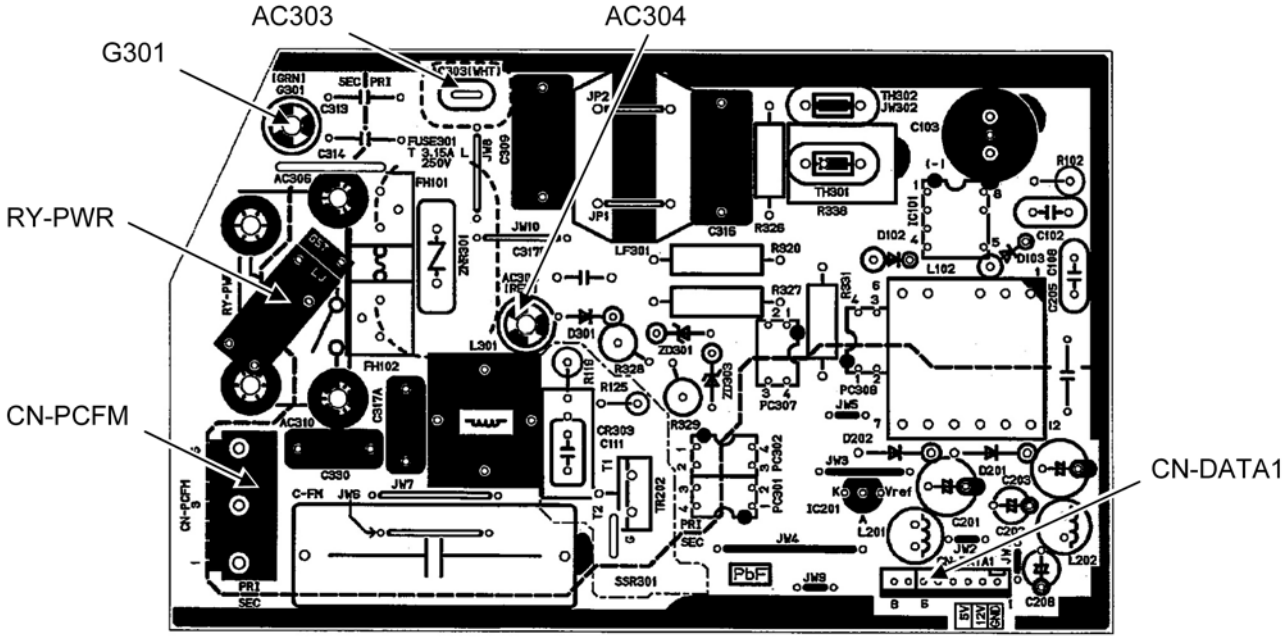

9.1.2.2 CS-S18KK CS-S24KK

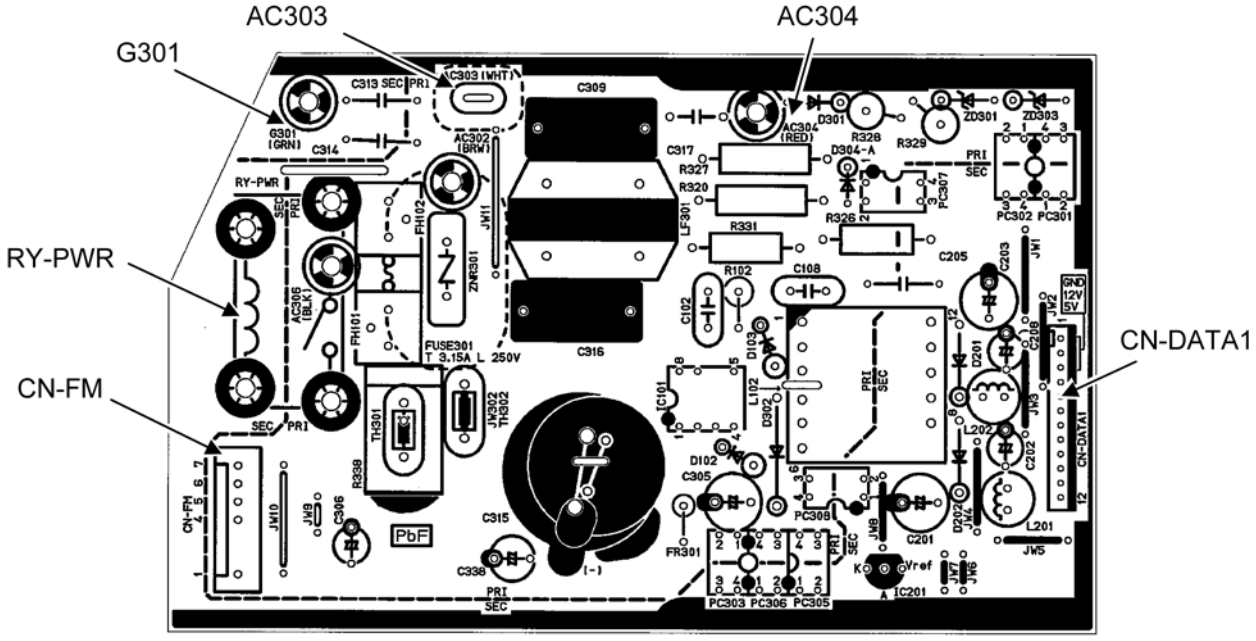

9.1.3 Indicator Printed Circuit Board

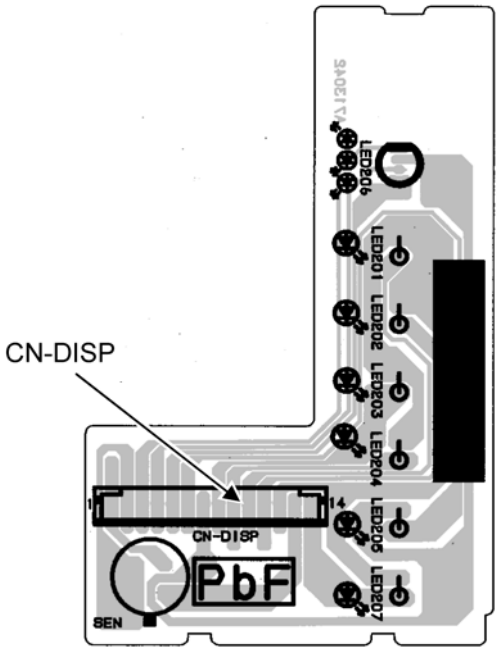

9.1.4 Receiver Printed Circuit Board

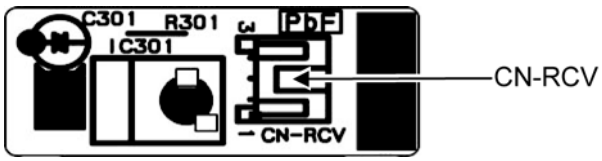

9.1.5 High Voltage Power Supply Printed Circuit Board

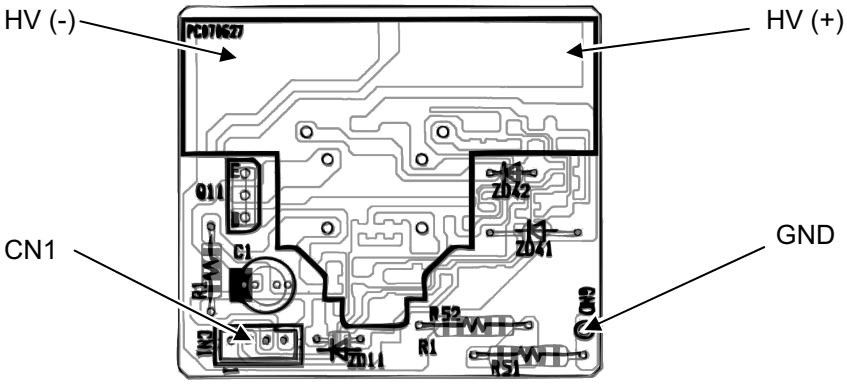

9.1.6 Comparator Printed Circuit Board

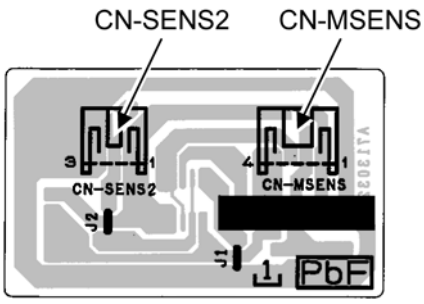

9.1.7 Eco Patrol Printed Circuit Board

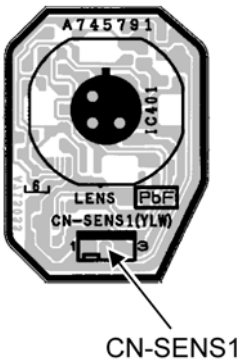

9.2 Outdoor Unit

9.2.1 Main Printed Circuit Board

9.2.1.1 CU-S9KK

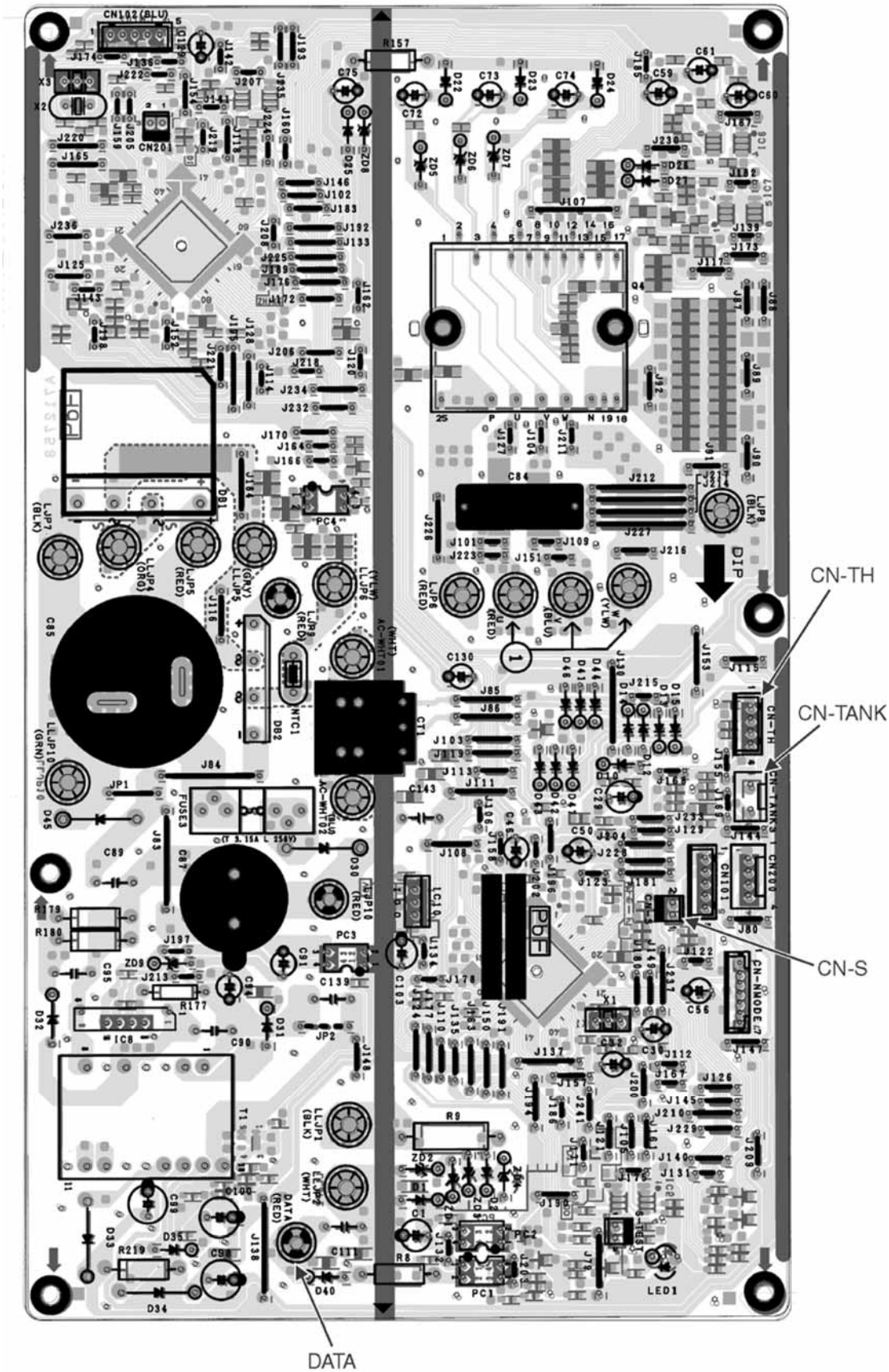

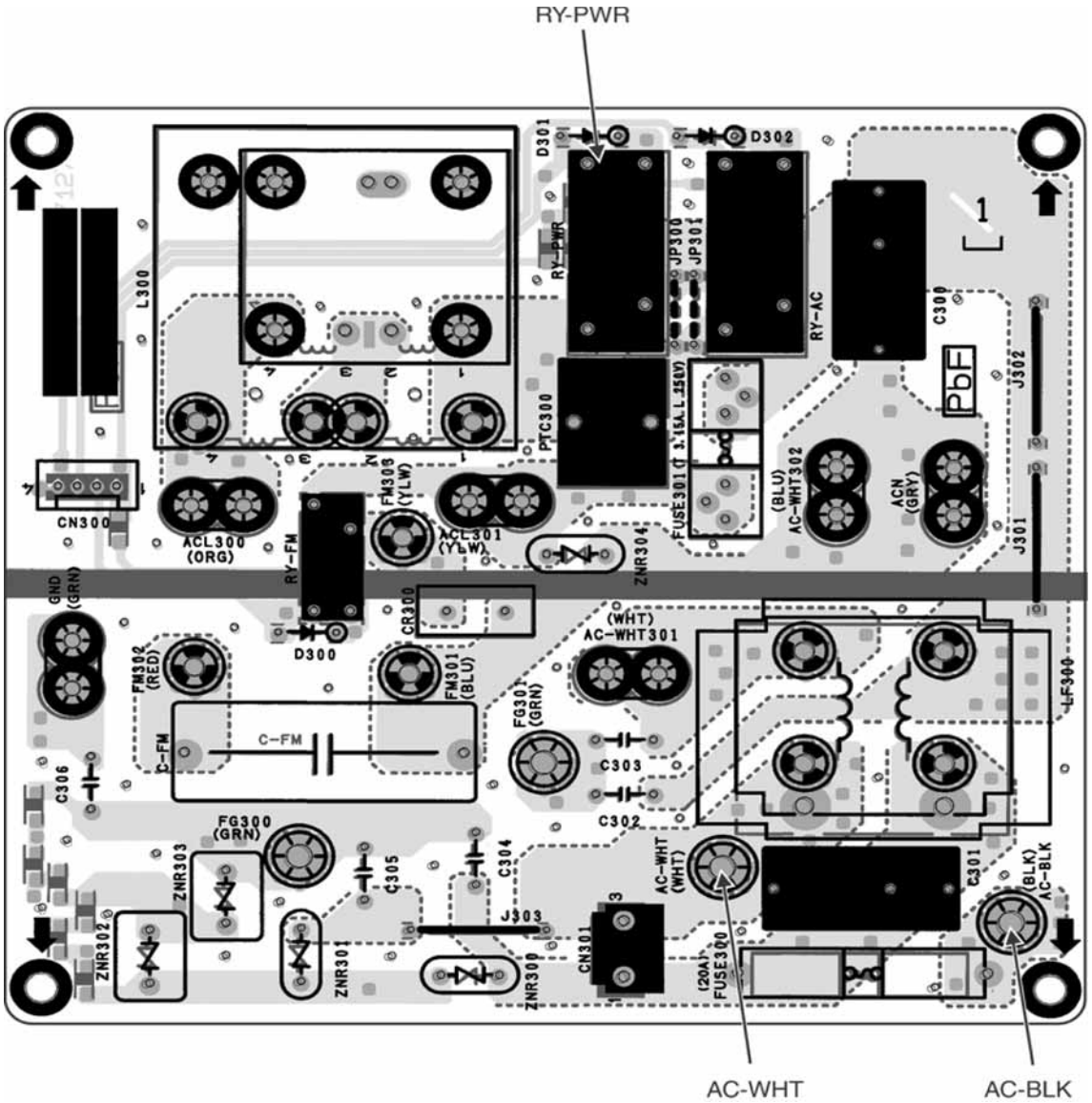
RY-PWR
D301
D302
RY-PWR
JP300
JP301
RY-AC
C300
L300
PTC300
FUSE301 (T 3.15A L 250V)
PbF
J302
J301
CN300
ACL300 (ORG)
RY-FM
FM303 (YLW)
ACL301 (YLW)
ZNR304
(BLU) AC-WHT302
ACN (GRY)
GND (GRN)
CR300
D300
(WHT) AC-WHT301
FM302 (RED)
FM301 (BLU)
FG301 (GRN)
C-FM
C-FM
C303
C302
LF300
C306
FG300 (GRN)
ZNR303
C305
C304
J303
AC-WHT (WHT)
C301
(BLK) AC-BLK
ZNR302
ZNR301
ZNR300
CN301
(20A) FUSE300
AC-WHT
AC-BLK

9.2.1.2 CU-S12KK

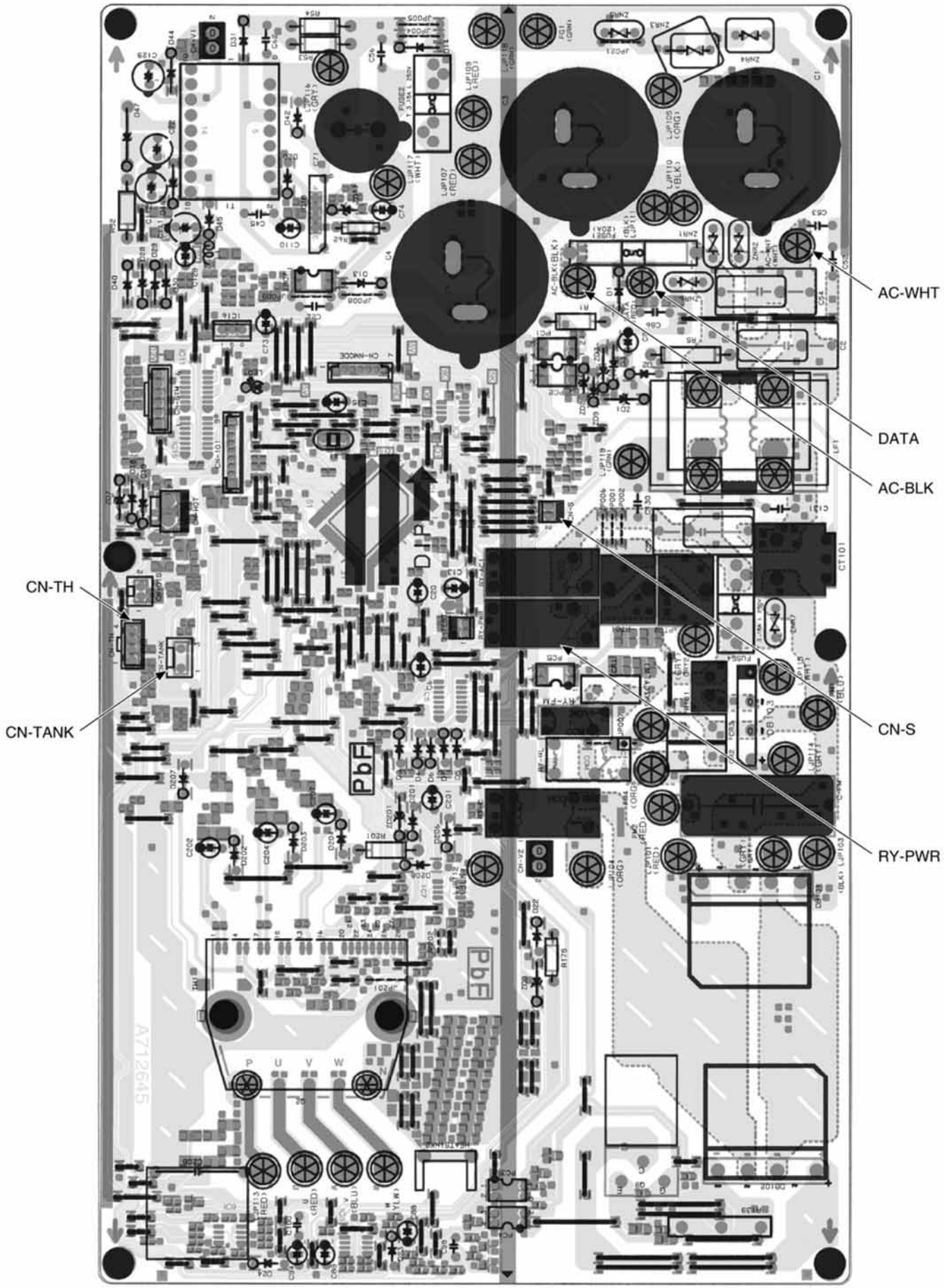

9.2.1.3 CU-S18KKQ CU-S24KKQ

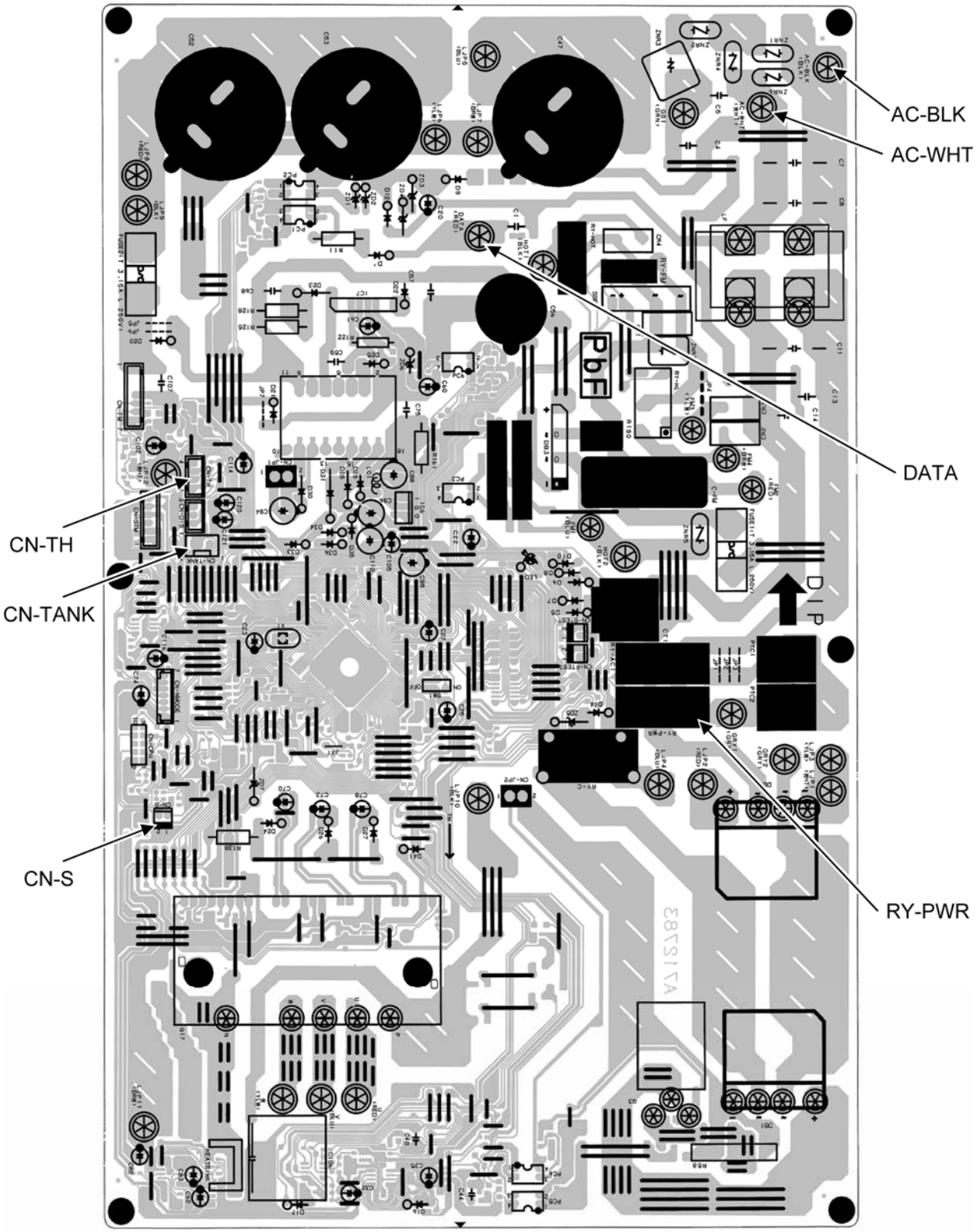

10 Installation Instruction

10.1 Select The Best Location

10.1.1 Indoor Unit

- Do not install the unit in excessive oil fume area such as kitchen, workshop and etc.
- There should not be any heat source or steam near the unit.
- There should not be any obstacles blocking the air circulation.
- A place where air circulation in the room is good.
- A place where drainage can be easily done.
- A place where noise prevention is taken into consideration.
- Do not install the unit near the door way.
- Ensure the spaces indicated by arrows from the wall, ceiling, fence or other obstacles.
- Recommended installation height for indoor unit shall be at least 2.5m.

10.1.2 Outdoor Unit

- If an awning is built over the unit to prevent direct sunlight or rain, be careful that heat radiation from the condenser is not obstructed.
- There should not be any animal or plant which could be affected by hot air discharged.
- Keep the spaces indicated by arrows from wall, ceiling, fence or other obstacles.
- Do not place any obstacles which may cause a short circuit of the discharged air.
- If piping length is over the [piping length for additional gas], additional refrigerant should be added as shown in the table:

Model	Horse Power (HP)	Piping size		Std. Length (m)	Max Elevation (m)	Min Piping Length (m)	Max Piping Length (m)	Additional Refrigerant (g/m)	Piping length for add. gas (m)
		Gas	Liquid						
S9***	1.0 ~ 1.75 HP	3/8”	1/4”	7.5	5	3	15	15	7.5
S12***		1/2"			5	3	15	15	7.5
S18***	2.0HP			5	15	3	20	15	10
S24***	2.5HP	5/8”			15	3	20	20	10

Example: For S9***

If the unit is installed at 10 m distance, the quantity of additional refrigerant should be 38 g…. (10-7.5) m x 15 g/m = 38 g.

10.1.3 Indoor/Outdoor Unit Installation Diagram

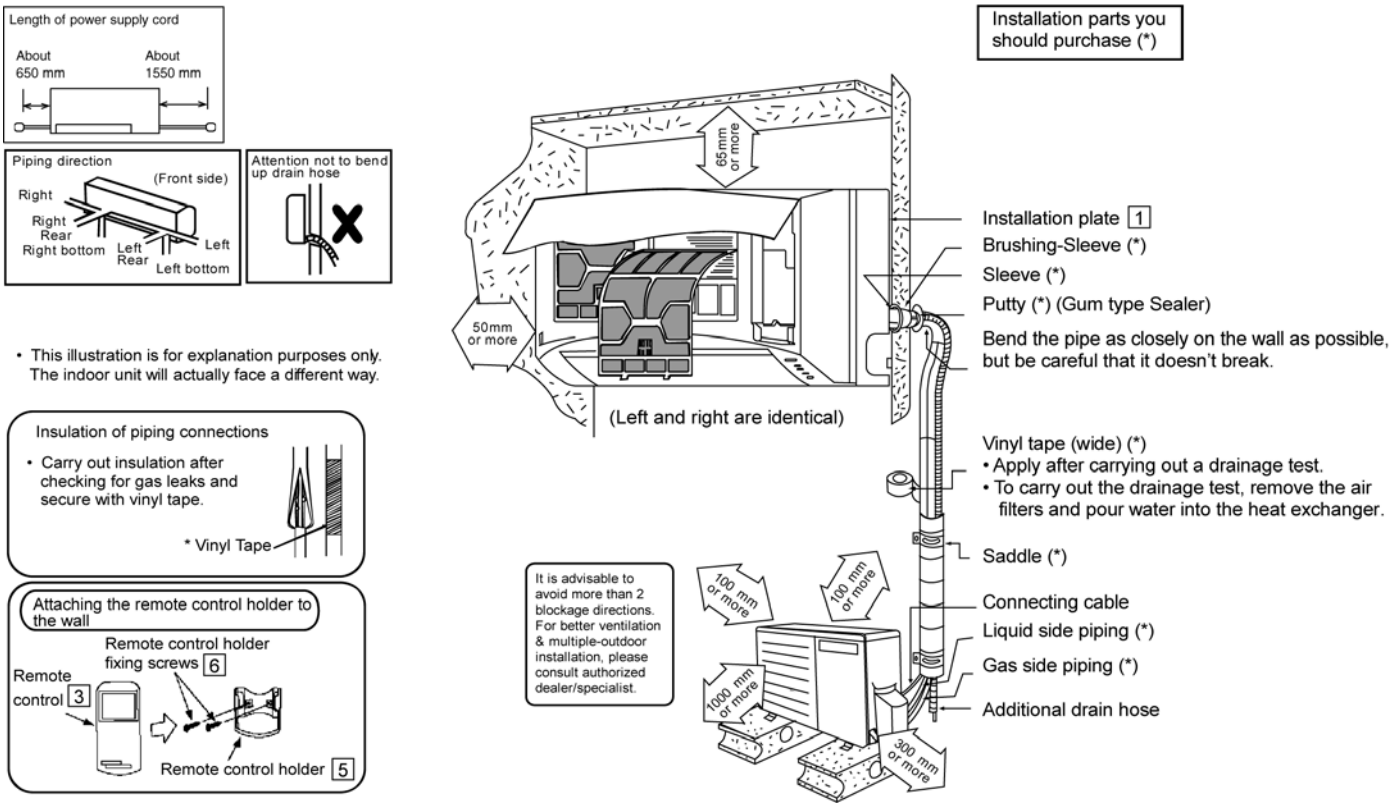

10.2 Indoor Unit

10.2.1 How to Fix Installation Plate

The mounting wall is strong and solid enough to prevent if from the vibration.

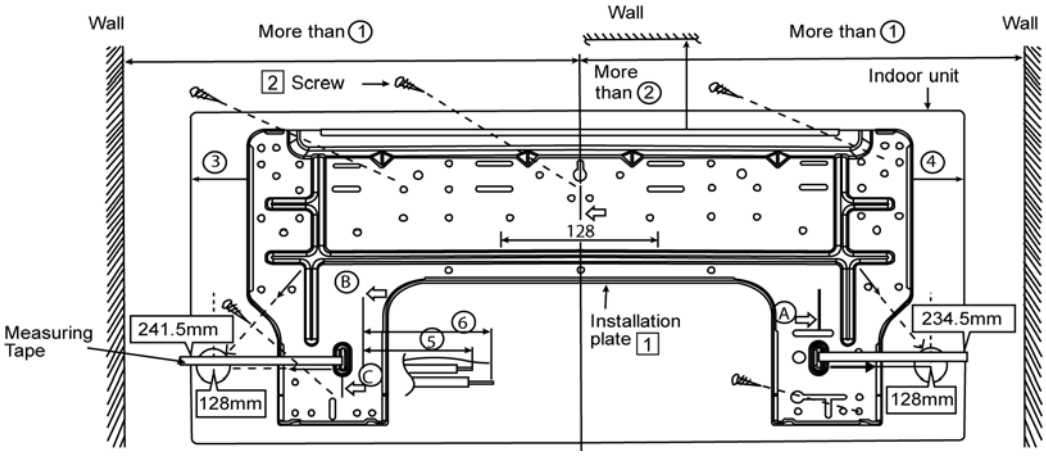

Model	Dimension					
	①	②	③	④	⑤	⑥
S9***, S12***	485 mm	82 mm	165 mm	158 mm	93 mm	145 mm
S18***, S24***	585 mm	82 mm	165 mm	158 mm	219 mm	269 mm

The centre of installation plate should be at more than ① mm at right and left of the wall.

The distance from installation plate edge to ceiling should more than ②.

From installation plate left edge to unit's left side is ③.

From installation plate right edge to unit's right side is ④.

Ⓑ : For left side piping, piping connection for liquid should be about ⑤ from this line.

: For left side piping, piping connection for gas should be about ⑥ from this line.

1 Mount the installation plate on the wall with 5 screws or more (at least 5 screws).
(If mounting the unit on the concrete wall, consider using anchor bolts.)
   - Always mount the installation plate horizontally by aligning the marking-off line with the thread and using a level gauge.

2 Drill the piping plate hole with ø70 mm hole-core drill.
   - Line according to the left and right side of the installation plate. The meeting point of the extended line is the center of the hole. Another method is by putting measuring tape at position as shown in the diagram above. The hole center is obtained by measuring the distance namely 128mm for left and right hole respectively.
   - Drill the piping hole at either the right or the left and the hole should be slightly slanting to the outdoor side.

10.2.2 To Drill a Hole in the Wall and Install a Sleeve of Piping

1 Insert the piping sleeve to the hole.
2 Fix the busing to the sleeve.
3 Cut the sleeve until it extrudes about 15 mm from the wall

> **⚠ Caution**
> When the wall is hollow, please be sure to use the sleeve for tube assembly to prevent dangers caused by mice biting the connecting cable.

4 Finish by sealing the sleeve with putty or caulking compound at the final stage.

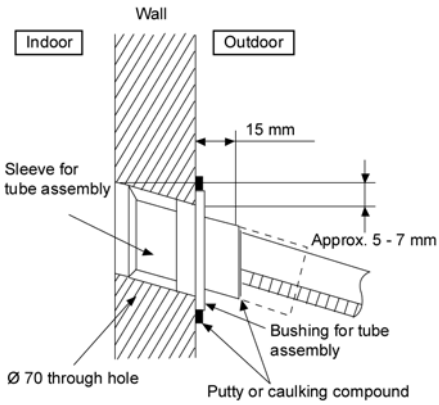

10.2.3 Indoor Unit Installation

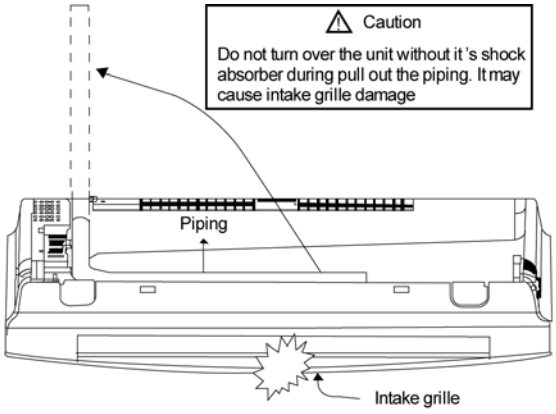

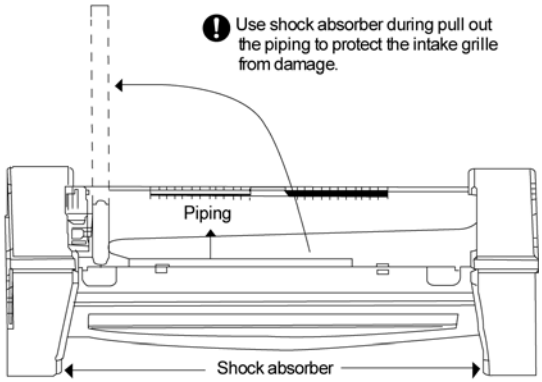

10.2.3.1 For the right rear piping

Step-1	Pull out the Indoor piping
Step-2	Install the Indoor Unit
Step-3	Secure the Indoor Unit
	• If indoor power supply, excess length of power supply must arrange accordingly, please refer "Power supply cord arrangement" before secure the indoor unit.
Step-4	Insert the connecting cable

10.2.3.2 For the right and right bottom piping

Step-1	Pull out the Indoor piping
Step-2	Install the Indoor Unit
Step-3	Insert the connecting cable
Step-4	Secure the Indoor Unit
	• If indoor power supply, excess length of power supply must arrange accordingly, please refer "Power supply cord arrangement" before secure the indoor unit.

10.2.3.3 For the embedded piping

Step-1	Replace the drain hose
Step-2	Bend the embedded piping
	• Use a spring bender or equivalent to bend the piping so that the piping is not crushed.
Step-3	Pull the connecting cable into Indoor Unit
	• The inside and outside connecting cable can be connected without removing the front grille.
Step-4	Cut and flare the embedded piping
	• When determining the dimensions of the piping, slide the unit all the way to the left on the installation plate. • Refer to the section "Cutting and flaring the piping".
Step-5	Install the Indoor Unit
Step-6	Connect the piping
	• Please refer to "Connecting the piping" column in outdoor unit section. (Below steps are done after connecting the outdoor piping and gas-leakage confirmation.)
Step-7	Insulate and finish the piping
	• Please refer to "Piping and finishing" column of outdoor section and "Insulation of piping connection" column as mentioned in indoor/outdoor unit installation.
Step-8	Secure the Indoor Unit

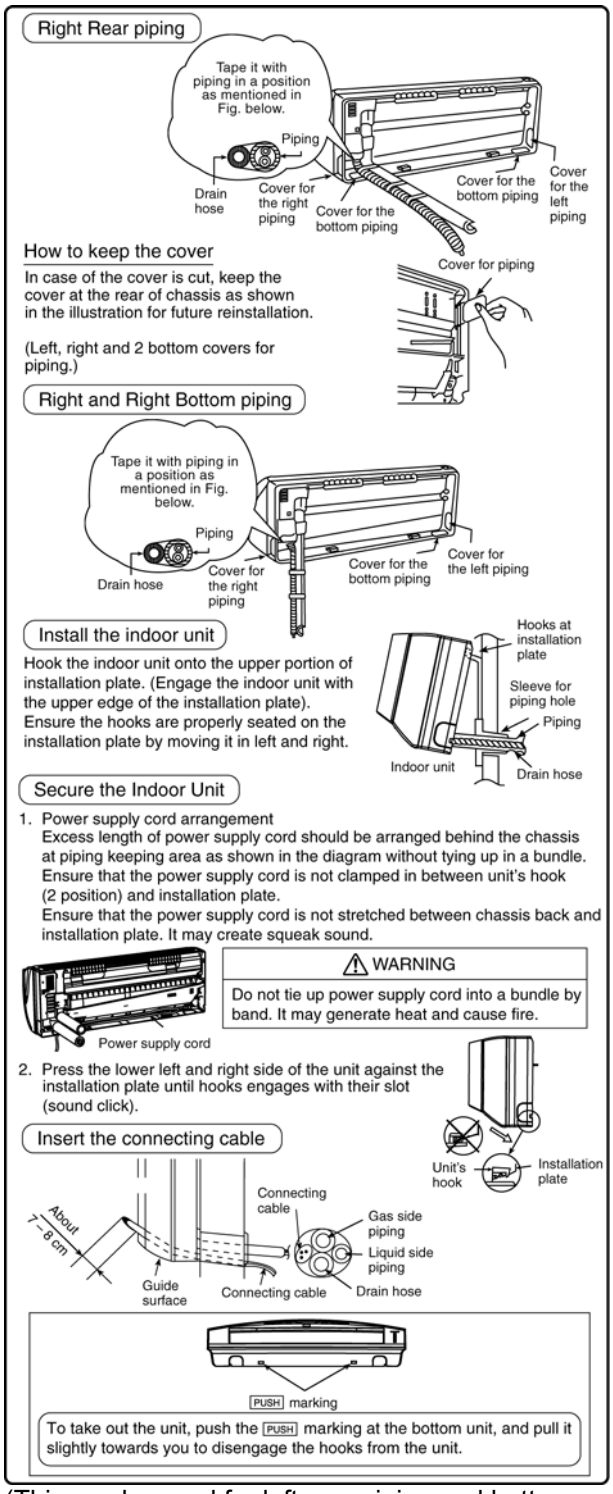

(This can be used for left rear piping and bottom piping also.

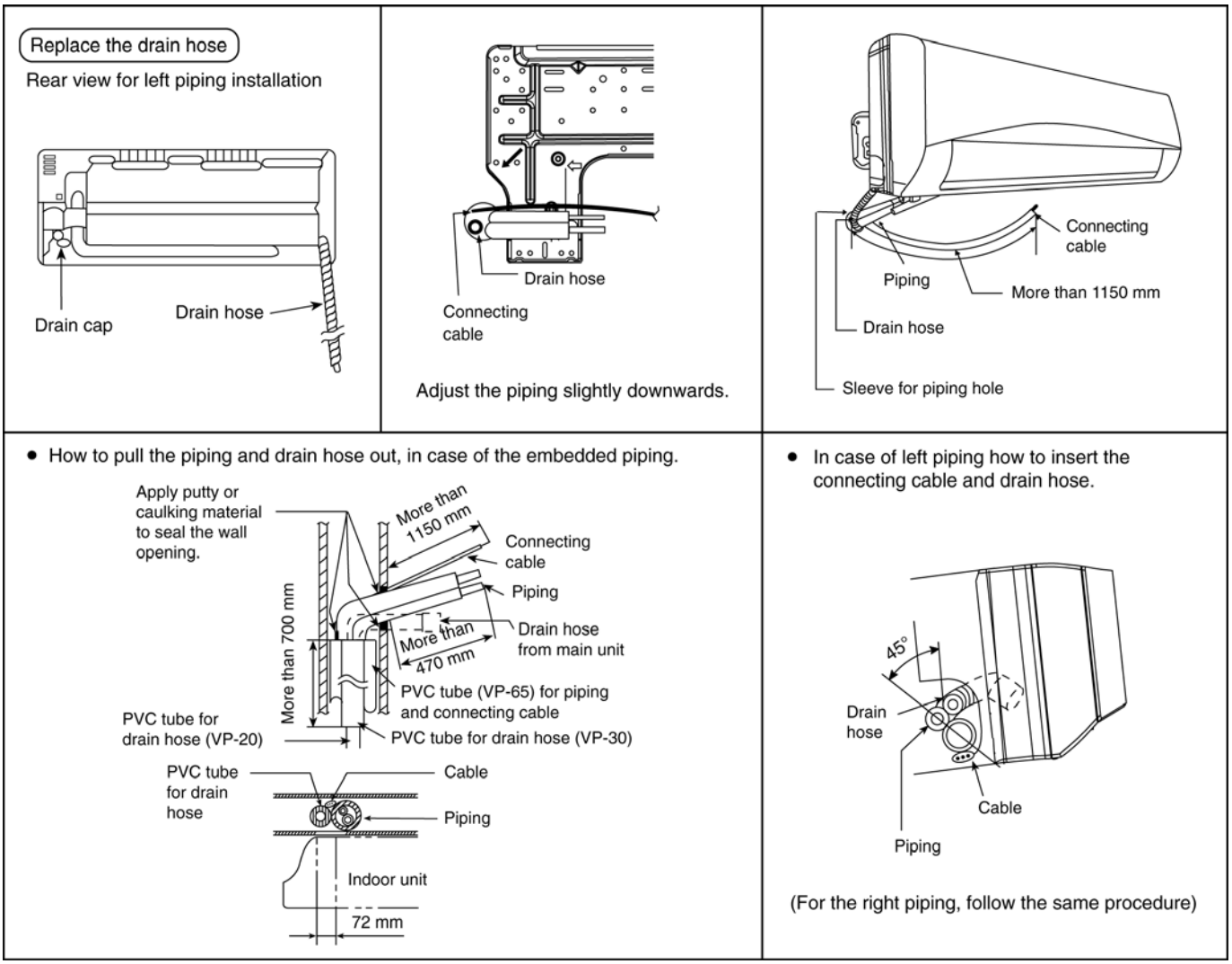

10.2.4 Connect the Cable to the Indoor Unit

1. The inside and outside connecting cable can be connected without removing the front grille.
2. **Connecting cable** between indoor unit and outdoor unit shall be approved polychloroprene sheathed 4 x 1.5 mm^2 (1.0 ~ 7.5HP) or 4 x 2.5 mm^2 (2.0 ~ 2.5HP) flexible cord, type designation 245 IEC 57 or heavier cord. Do not use joint connection cable. Replace the wire if the existing wire (from concealed wiring, or otherwise) is too short.

Terminals on the indoor unit	1	2	3
Colour of wires			
Terminals on the outdoor unit	1	2	3

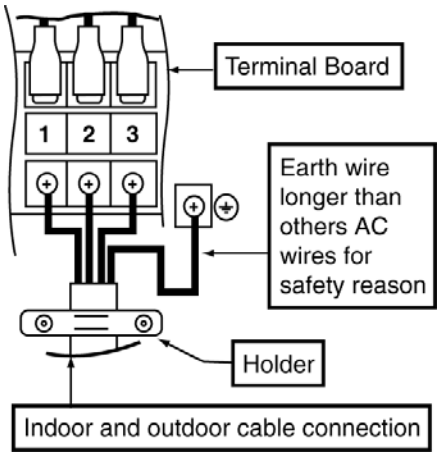

- Secure the connecting cable onto the control board with the holder.
  ⏚ This equipment must be properly earthed.

- Ensure the colour of wires of outdoor unit and the terminal Nos. are the same to the indoor's respectively.
- Earth wire shall be Yellow/Green (Y/G) in colour and longer than the other AC wires for safety reason.

10.2.4.1 Wiring stripping and connecting requirement

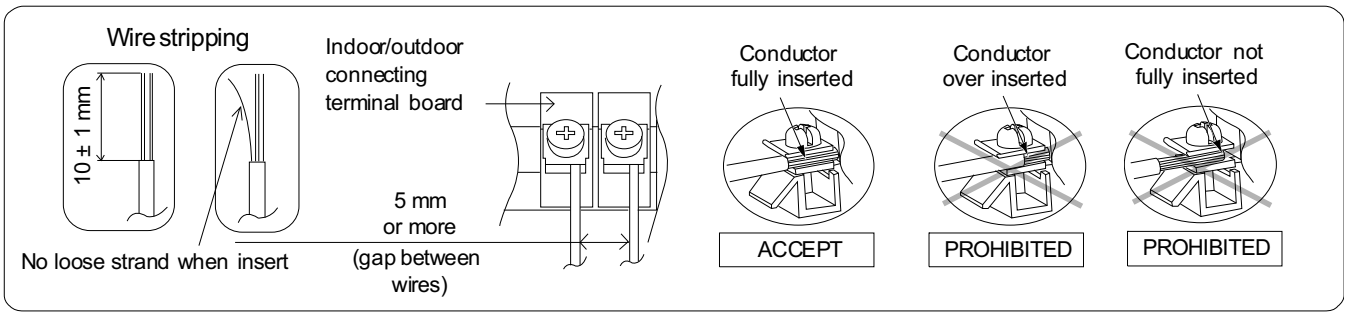

10.2.4.2 Cutting and flaring the piping

1 Please cut using pipe cutter and then remove the burrs.
2 Remove the burrs by using reamer. If burrs are not removed, gas leakage may be caused. Turn the piping end down to avoid the metal powder entering the pipe.
3 Please make flare after inserting the flare nut onto the copper pipes.

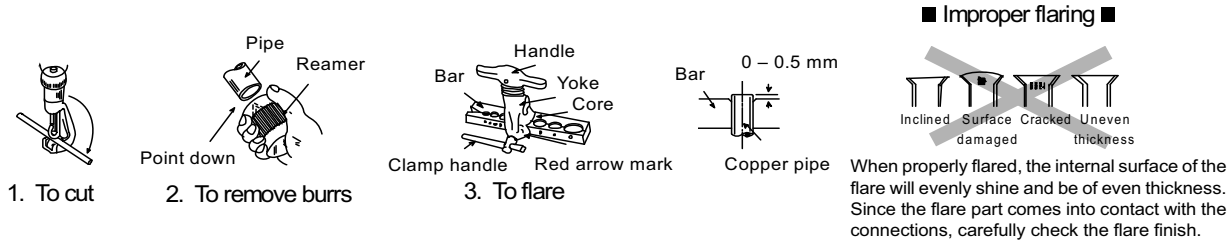

1. To cut
2. To remove burrs
3. To flare

When properly flared, the internal surface of the flare will evenly shine and be of even thickness. Since the flare part comes into contact with the connections, carefully check the flare finish.

10.3 Outdoor Unit

10.3.1 Install the Outdoor Unit

- After selecting the best location, start installation to Indoor/Outdoor Unit Installation Diagram.
  1 Fix the unit on concrete or rigid frame firmly and horizontally by bolt nut (ø10 mm).
  2 When installing at roof, please consider strong wind and earthquake. Please fasten the installation stand firmly with bolt or nails.

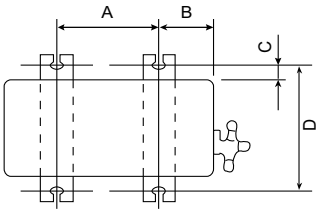

Model	A	B	C	D
S9***	474 mm	87 mm	18.5 mm	261 mm
S12***	570 mm	105 mm	18.5 mm	320 mm
S18***, S24***	612.5 mm	131 mm	19 mm	383 mm

10.3.2 Connect the Piping

10.3.2.1 Connecting the piping to indoor unit

Please make flare after inserting flare nut (locate at joint portion of tube assembly) onto the copper pipe. (In case of using long piping)

Connect the piping
- Align the center of piping and sufficiently tighten the flare nut with fingers.
- Further tighten the flare nut with torque wrench in specified torque as stated in the table.

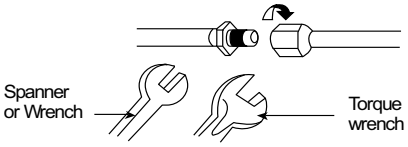

Piping size	Torque
1/4" (6.35 mm)	[18 N•m (1.8 kgf.m)]
3/8" (9.52 mm)	[42 N•m (4.3 kgf.m)]
1/2" (12.7 mm)	[55 N•m (5.6 kgf.m)]
5/8" (15.88 mm)	[65 N•m (6.6 kgf.m)]
3/4" (19.05 mm)	[100 N•m (10.2 kgf.m)]

CAUTION Do not over tighten, over tightening may cause gas leakage.

10.3.2.2 Connecting the piping to outdoor

Decide piping length and then cut by using pipe cutter. Remove burrs from cut edge. Make flare after inserting the flare nut (locate at valve) onto the copper pipe. Align center of piping to valve and then tighten with torque wrench to the specified torque as stated in the table.

10.3.3 Evacuation of the equipment

When installing an air conditioner, be sure to evacuate the air inside the indoor unit and pipes in the following procedures.

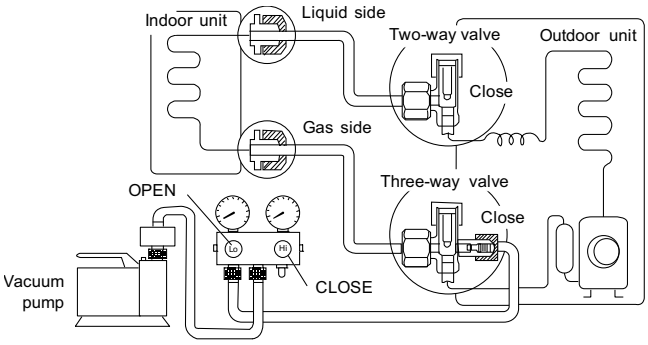

1 Connect a charging hose with a push pin to the Low side of a charging set and the service port of the 3-way valve.
   - Be sure to connect the end of the charging hose with the push pin to the service port.
2 Connect the center hose of the charging set to a vacuum pump.

3 Turn on the power switch of the vacuum pump and make sure that the needle in the gauge moves from 0 cmHg (0 MPa) to -76 cmHg (-0.1 MPa). Then evacuate the air approximately ten minutes.
4 Close the Low side valve of the charging set and turn off the vacuum pump. Make sure that the needle in the gauge does not move after approximately five minutes.
Note: BE SURE TO TAKE THIS PROCEDURE IN ORDER TO AVOID REFRIGERANT GAS LEAKAGE.
5 Disconnect the charging hose from the vacuum pump and from the service port of the 3-way valve.
6 Tighten the service port caps of the 3-way valve at a torque of 18 N•m with a torque wrench.
7 Remove the valve caps of both of the 2-way valve and 3-way valve. Position both of the valves to “OPEN” using a hexagonal wrench (4 mm).
8 Mount valve caps onto the 2-way valve and the 3-way valve.
   - Be sure to check for gas leakage.

⚠ Caution

- If gauge needle does not move from 0 cmHg (0 MPa) to -76 cmHg (-0.1 MPa), in step ③ above take the following measure:
  - If the leak stops when the piping connections are tightened further, continue working from step ③.
  - If the leak does not stop when the connections are retightened, repair location of leak.
  - Do not release refrigerant during piping work for installation and reinstallation.
  - Take care of the liquid refrigerant, it may cause frostbite.

10.3.4 Connect the Cable to the Outdoor Unit

1 Remove the control board cover from the unit by loosening the screw.
2 **Connecting cable** between indoor unit and outdoor unit shall be approved polychloroprene sheathed 4 x 1.5 mm^2 (1.0 ~ 1.75HP) or 4 x 2.5 mm^2 (2.0 ~ 2.5HP) flexible cord, type designation 245 IEC 57 or heavier cord. Do not use joint connection cable. Replace the wire if the existing wire (from concealed wiring, or otherwise) is too short.

Terminals on the outdoor unit	1	2	3	⏚
Colour of wires				
Terminals on the indoor unit	1	2	3	⏚

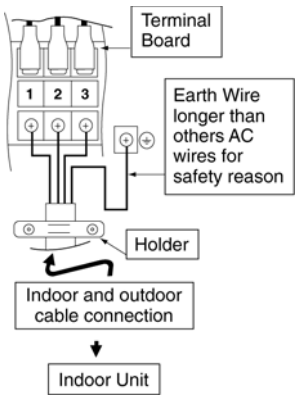

3 Secure the cable onto the control board with the holder (clamper).
4 Attach the control board cover back to the original position with screw.
5 For wire stripping and connection requirement, refer to instructions 10.2.4 of indoor unit.

⏚ This equipment must be properly earthed.

- Earth wire shall be Yellow/Green (Y/G) in colour and longer than the other AC wires for safety reason.

10.3.5 Piping insulation

1 Please carry insulation at piping connection portion as mentioned in Indoor/Outdoor Unit Installation Diagram. Please wrap the insulated piping end to prevent water from going inside the piping.
2 If drain hose or connecting piping is in the room (where dew may form), please increase the insulation by using POLY-E-FOAM with thickness 6 mm or above.

11 Operation Control

11.1 Basic Function

Inverter control, which equipped with a microcomputer in determining the most suitable operation mode as time passes, automatically adjusts output power for maximum comfort always. In order to achieve the suitable operation mode, the microcomputer maintains the set temperature by measuring the temperature of the environment and performing temperature shifting. The compressor at outdoor unit is operating following the frequency instructed by the microcomputer at indoor unit that judging the condition according to internal setting temperature and intake air temperature.

11.1.1 Internal Setting Temperature

Once the operation starts, remote control setting temperature will be taken as base value for temperature shifting processes. These shifting processes are depending on the air conditioner settings and the operation environment. The final shifted value will be used as internal setting temperature and it is updated continuously whenever the electrical power is supplied to the unit.

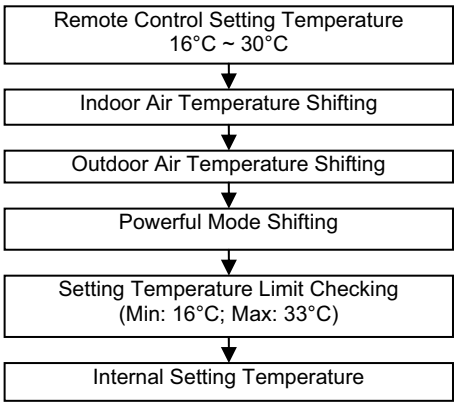

11.1.2 Cooling Operation

11.1.2.1 Thermostat control

- Compressor is OFF when intake Air Temperature - Internal Setting Temperature < -0.5°C.
- Compressor is ON after waiting for 3 minutes, if the Intake Temperature - Internal Setting Temperature > Compressor OFF point.

11.1.3 Soft Dry Operation

11.1.3.1 Thermostat control

- Compressor is OFF when Intake Temperature - Internal Setting Temperature < -1.0°C.
- Compressor is ON after waiting for 3 minutes, if the Intake Air Temperature - Internal Setting Temperature > Compressor OFF point.

11.1.3.2 Automatic Operation

- This mode can be set using remote control and the operation is decided by indoor intake air temperature.
- During operation mode judgment at the beginning of the Auto Mode operation, indoor fan motor (with speed of Lo-) is running for 30 seconds to detect the indoor intake air temperature.
- The operation mode is decided based on below chart.

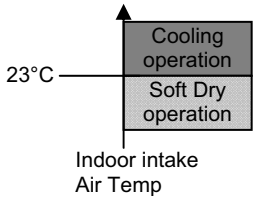

- After the operation mode is decided, the unit operation will follow the respective operation mode control.

11.2 Indoor Fan Motor Operation

11.2.1 Basic Rotation Speed

- Manual Fan Speed
  - Fan motor's number of rotation is determined according to remote control setting.

Remote control	○	○	○	○	○
Tab	Hi	Me+	Me	Me-	Lo

- Auto Fan Speed
  - According to room temperature and setting temperature, indoor fan speed is determined automatically.
  - The indoor fan will operate according to pattern below.

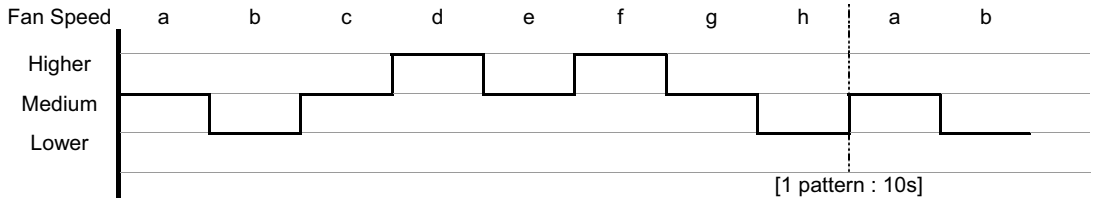

- Feedback control
  - Immediately after the fan motor is started, feedback control is performed once every second.
  - During fan motor on, if fan motor feedback ≥ 2550 rpm or <50 rpm continuously for 10 seconds, the fan motor error counter increased; fan motor is then stopped and restarted. If the fan motor error counter increased to 7, then H19 – fan motor error is detected. Operation stopped and could not be restarted.

11.3 Outdoor Fan Motor Operation

Outdoor fan motor is operated with one fan speed only. Outdoor fan turns on when compressor starts to operate. But outdoor fan will turns off 30 seconds after compressor stops to operate.

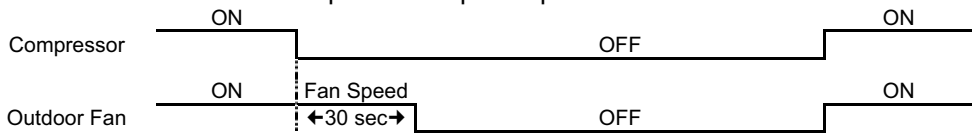

11.4 Airflow Direction

- There are two types of airflow, vertical airflow (directed by horizontal vane) and horizontal airflow (directed by vertical vanes).
- Control of airflow direction can be automatic (angles of direction is determined by operation mode, heat exchanger temperature and intake air temperature) and manual (angles of direction can be adjusted using remote control).

11.4.1 Vertical Airflow

Operation Mode	Airflow Direction	Vane Angle (°)				
		1	2	3	4	5
Cooling and e-ion	Auto	20 ~ 45				
	Manual	20	26	32	37	45
Soft Dry	Auto	20 ~ 45				
	Manual	20	26	32	37	45

- Automatic vertical airflow direction can be set using remote control; the vane swings up and down within the angles as stated above. It does not swing during fan motor stop. When the air conditioner is stopped using remote control, the vane will shift to close position.

- Manual vertical airflow direction can be set using remote control; the angles of the vane are as stated above and the positions of the vane are as figure below. When the air conditioner is stopped using remote control, the vane will shift to close position.

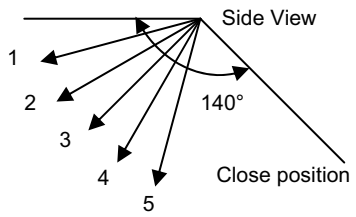

11.4.2 Horizontal Airflow

11.4.2.1 S9KK, S12KK

The horizontal airflow direction louvers can be adjusted manually by hand.

11.4.2.2 S18KK, S24KK

- Automatic airflow direction can be set using remote control; the vane swings left and right within the angles as stated below. It does not swing during fan motor stop.

Operation Mode	Vane Angle (°)
Cooling and soft dry	68 ~112

- Manual vertical airflow direction can be set using remote control; the angles of the vane are as stated below and the positions of the vane are as figure below:

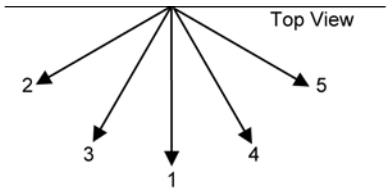

Pattern	1	2	3	4	5
Airflow Direction Patterns at Remote Control					
Vane Angle (°)	90	68	79	101	112

11.5 Quiet Operation (Cooling Mode/Cooling Area of Dry Mode)

- Purpose
  - To provide quiet cooling operation compare to normal operation.

- Control condition
  - Quiet operation start condition
    - When Quiet button at remote control is pressed Quiet INDICATOR illuminates.
  - Quiet operation stop condition
    - When one of the following conditions is satisfied, quiet operation stops:
      - Eco Patrol button is pressed.
      - Powerful button is pressed.
      - Mild Dry Cooling button is pressed.
      - Stop by OFF/ON button.
      - OFF Timer activates.
      - Quiet button is pressed again.
    - When quiet operation is stopped, operation is shifted to normal operation with previous setting.
    - When fan speed is changed, quiet operation is shifted to quiet operation of the new fan speed.
    - When operation mode is changed, quiet operation is shifted to quiet operation of the new mode.
    - During quiet operation, if ON timer activates, quiet operation maintains.
    - After off, when on back, quiet operation is not memorized.

- Control content
  - Fan speed is changed from normal setting to quiet setting of respective fan speed. This is to reduce sound of Hi, Me, Lo for 3dB (more than 3dB for some models).
  - Fan speed for quiet operation is -1 step from setting fan speed.

11.6 Powerful Mode Operation

- When the powerful mode is selected, the internal setting temperature will shift lower up to 2°C (for Cooling/Soft Dry) than remote control setting temperature for 240 minutes and the fan speed will increase to achieve the setting temperature quickly.
- Powerful operation stops condition
  - When one of the following condition is satisfied, powerful operation stops:
    - Eco Patrol button is pressed.
    - Quiet button is pressed.
    - Mild Dry Cooling button is pressed.
    - Stop by OFF/ON button.
    - OFF Timer activates.
    - Powerful button is pressed again.
    - Powerful operation continue for 240 minutes.

11.7 Timer Control

- There are 2 sets of ON and OFF timer is available to turn the unit ON or OFF at different preset time.
- If more than one timer had been set, the upcoming timer will be display and will activated in sequence.

11.7.1 ON Timer Control

ON Timer 1 and ON Timer 2 can be set using remote control, where the unit with timer set will start operation earlier than the setting time. This is to provide a comfortable environment when reaching the set ON time.

60 minutes before the set ON time, indoor (at fan speed of Lo-) and outdoor fan motor start operation for 30 seconds to determine the indoor intake air temperature and outdoor air temperature in order to judge the operation starting time.

From the above judgment, the decided operation will start operation earlier than the set time as shown below.

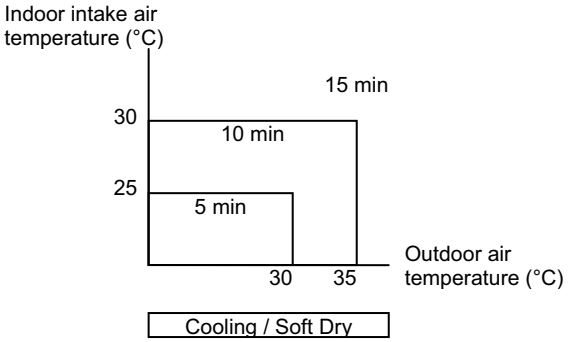

11.7.2 OFF Timer Control

OFF Timer 1 and OFF Timer 2 can be set using remote control, where the unit with timer set will stop at set OFF time.
Notes:

1. By pressing ON/OFF operation button, the ON Timer or OFF Timer setting will not be cancelled.
2. To cancel the previous timer setting, press CANCEL button.
3. To activate the previous timer setting, press SET button.
4. If main power supply is switched off, the Timer setting will be cancelled.

11.8 Random Auto Restart Control

- When the power supply is cut off during the operation of air conditioner, the compressor will re-operate within three to four minutes. There are 10 patterns to be selected randomly after power supply resumes.
- This control is not applicable during OFF/ON Timer setting.

11.9 Indication Panel

LED	POWER	TIMER	QUIET	POWERFUL	e-ion	ECO PATROL	PATROL		
Color	Green	Orange	Orange	Orange	Blue	Green	Blue	Orange	Red
Light ON	Operation ON	Timer Setting ON	Quiet Mode ON	Powerful Mode ON	e-ion ON	Eco Patrol ON	Air Clean	Moderate	Dirty
Light OFF	Operation OFF	Timer Setting OFF	Quiet Mode OFF	Powerful Mode OFF	e-ion OFF	Eco Patrol OFF	PATROL OFF		

Note:
- If POWER LED blinks, the possible operation of the unit is operation mode judgment, or ON timer sampling.
- If TIMER LED blinks, there is an abnormal operation occurs.
- If e-ion LED blinks, there is an abnormal e-ion operation occurs.
- If PATROL LED blinks, there is gas sensor error detection.

11.10 Patrol Operation

- To monitor air dirtiness level by using Patrol sensor and to maintain air freshness by activates e-ion operation

- Patrol operation starts condition
  - When the unit operation is started with “OFF/ON” button
  - When the unit stops, “Patrol” button is pressed, Patrol individual operation will start.
  - During cooling only operation, “Patrol” operation is selected.

- Patrol operation stops condition (when any of the following condition is fulfilled):
  - When “OFF/ON” button is selected.
  - During any operation with Patrol, “PATROL/e-ion” button is pressed.
  - When OFF Timer activates.

- To disable the Patrol Operation during unit starts (default) with “OFF/ON” button
  - Press “Set” button continuously for 15 seconds by using pointer during Air Conditioner is OFF condition to enter internal setting mode.
  - Press “Timer Decrement" button to select “Pt dFLt”.
  - Press “Timer Set” button to toggle Patrol operation default OFF/ON.
    - Long “beep”: Turn OFF Patrol operation default.
    - Short “beep”: Turn ON Patrol operation default.

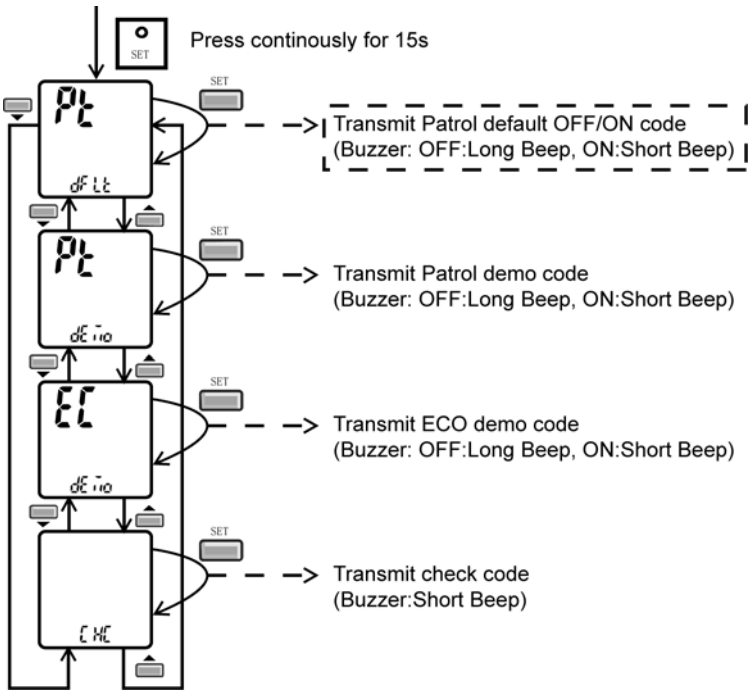

- Patrol Sensor Control
  - First 2 minutes from Patrol function activates is stabilization time, during stabilization time, no air dirtiness level is monitored. The Air Dirtiness level is set to Clean, Patrol LED turns blue color.
  - After that, Patrol sensor starts to record the resistance value at fixed interval. Higher resistance value indicates cleaner air.
  - The air dirtiness level is monitored by comparing the current resistance value with maximum resistance value from time to time to get the Air Dirtiness Value.
  - There are 3 air dirtiness level, based on the Air Dirtiness Value:
    - Air Dirtiness level 0: Clean – Patrol LED = blue color
    - Air Dirtiness level 1: Moderate – Patrol LED = orange color
    - Air Dirtiness level 2: Contaminated – Patrol LED = red color

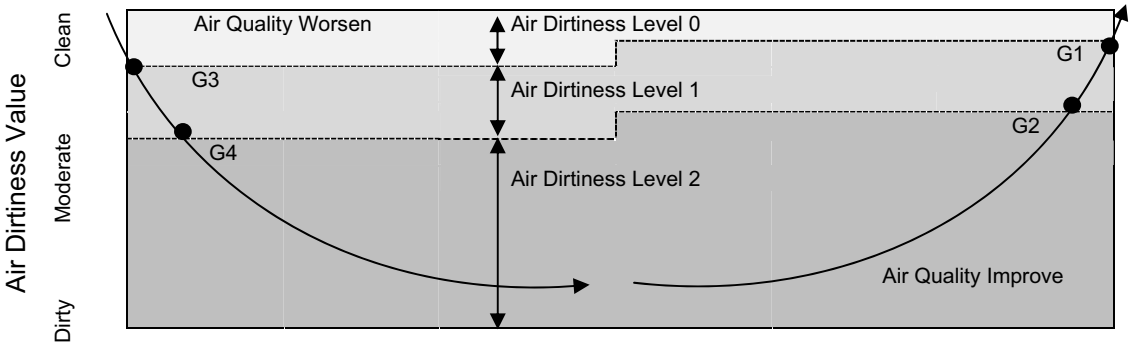

- Dirtiness level sensitivity adjustment
  It is possible to change the Patrol sensor sensitivity, where the Threshold value (G1 ~ G4) will be shifted accordingly:
  1 Press and release “SET” button.
  2 Press Timer ▲ / Timer ▼ button to select sensitivity.
  (Air 1 “Low Sensitivity” ↔ Air 2 “Standard” (Default) ↔ Air 3 “High Sensitivity”)
  3 Confirm setting by pressing “Timer Set” button. LCD returned to original display after 2 seconds.
  4 LCD returned to original display if remote control does not operate for 30 seconds

- e-ion Control
  - e-ion operation starts condition
    - When dirtiness at level 2 (Patrol LED turns red).
    - 2 minutes after stabilization time (Patrol LED turns red).
    - 4 hours at level 0 (Patrol LED turns red).
  - e-ion operation time
    - If dirtiness level improves from level 2 to level 1 (Patrol LED from red to orange), the unit carries out level change after 60 seconds.
    - When dirtiness level returns to level 0 (Patrol LED turns blue) continuously for 11 minutes or more, e-ion operation stops.

- Dirtiness Level and fan speed
  - When e-ion operation starts, the fan speed increases based on dirtiness level:

	Dirtiness level	rpm shift		
		Patrol individual operation	Combine operation	
			Auto	Manual
e-ion ON	Dirtiness level 0	No change	No change	No change
	Dirtiness level 1	Me-	+ 20	+1 fan tap (max=Hi)
	Dirtiness level 2	Me	+ 40	+2 fan tap (max=Hi)

  - Indoor Fan Control
    - During any operation mode combines with Patrol operation, fan speed follows respective operation mode.
    - During Patrol individual operation if e-ion starts, only Auto Fan Speed and no Powerful operation is allowed. Even if “Fan Speed” button is pressed, no signal is sent to air conditioner, and no change on LCD display.
    - During Patrol individual operation if e-ion stops, Indoor Fan stop operation.

- Airflow direction (Horizontal, Vertical) Control
  - During any operation mode combines with Patrol operation, air flow direction follows respective operation mode.
  - During Patrol individual operation if e-ion starts, only Auto Air Swing is allowed. Even if “Air Swing” button is pressed, no signal is sent to air conditioner, and no change on LCD display.
  - During Patrol individual operation if e-ion stops, Airflow direction louver closed.

- Indicator
  - When patrol is selected, patrol sensor indicator ON.

NO	Description		BLUE	ORANGE	RED	E-ION
1	When patrol function is not selected		OFF	OFF	OFF	-
2	During gas sensor error detection control		OFF	OFF	Blinking	OFF
3	During stop		OFF	OFF	OFF	OFF
4	2 minutes gas sensor initial stabilization time (Level 0)		ON	OFF	OFF	OFF
5	During operation During patrol	a. Dirtiness level 0*	ON	OFF	OFF	OFF
		b. Dirtiness level 1	OFF	ON	OFF	OFF
		c. Dirtiness level 1*	OFF	ON	OFF	ON
		d. Dirtiness level 2	OFF	OFF	ON	ON

- Remote Control Receiving Sound
  - Normal Operation ➔ Patrol Mode : Beep
  - Patrol Mode ➔ Stop : Long Beep
  - Patrol Mode ➔ Normal Operation : Beep
  - Stop ➔ Patrol : Beep

- Timer Control
  - When ON timer activates when unit stops, previous operation resumes and restored last saved Patrol operation status.
  - When ON timer activates during any operation, no change and carry on current operation.
  - When OFF timer activates during any operation, all operation stops and the latest Patrol operation status is saved.

- Power Failure Control
  - During Patrol individual operation, if power failure occurs, after power resumes, Patrol individual operation resumes immediately.
  - During combination operation, if power failure occurs, after power resumes combination operation resume immediately.

- Patrol Operation Demo Mode
  - Patrol Operation Demo Mode start condition
    - Press “Set” button continuously for 15 seconds by using pointer during Air Conditioner is OFF condition to enter internal setting mode.
    - Press “Timer Decrement” button to select “Pt demo”.
    - Press “Timer Set” button to toggle Patrol operation demo mode.
      - Long “beep”: Turn OFF Patrol operation demo mode.
      - Short “beep”: Turn ON Patrol operation demo mode.

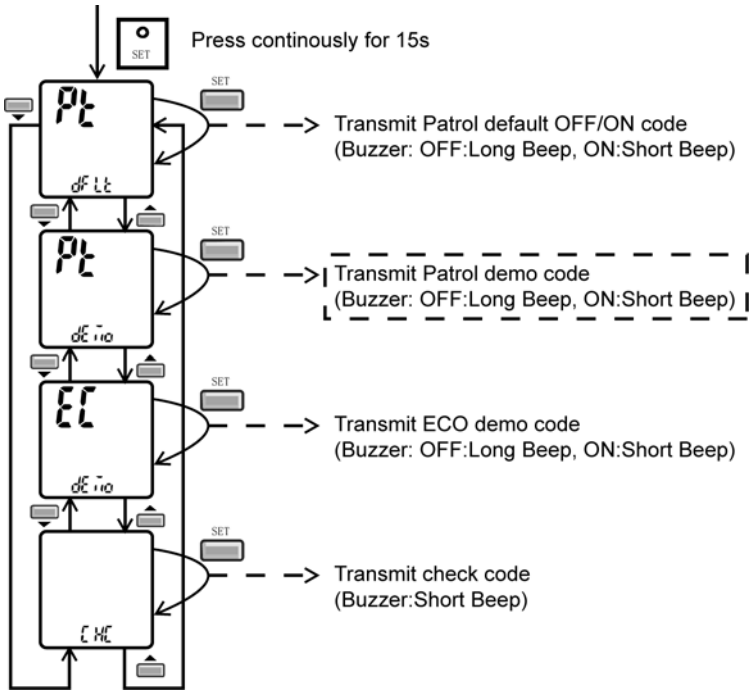

- The Patrol indicator change color every 10 seconds follows the pattern below for demo purpose:

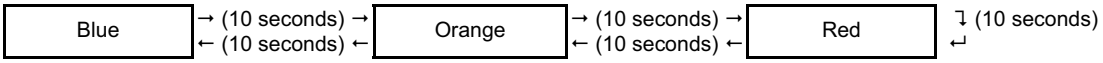

- During demo, all operation stops, remote control buttons and auto OFF/ON button are ignored.
- Patrol Operation Demo Mode stop condition
  - Power supply reset.

11.11 E-Ion Operation

- This operation provides clean air by producing negative ions to attract dust captured at the positively charged active e-ion filters.

- e-ion operation start condition
  - During unit running at any operation mode, if “e-ion” operation is selected, combination operation (operation mode + e-ion operation) starts.
  - During unit is OFF, if “e-ion” operation is selected, e-ion individual operation starts.

- e-ion operation stop condition
  - When “OFF/ON” button is pressed to stop the operation.
  - When “PATROL/e-ion” button is pressed.
  - When OFF Timer activates.

- e-ion operation pause condition
  - When indoor fan stop (during deice, odor cut control, thermostat off, etc.). e-ion operation resume after indoor fan restarts.
  - When indoor intake temperature ≥ 40°C. e-ion operation resume after indoor intake temperature < 40°C continuously for 30 minutes.

- Indoor fan control
  - During any operation mode combines with e-ion operation, fan speed follows respective operation mode.
  - During e-ion individual operation – only Auto Fan Speed and no Powerful operation is allowed. Even if Fan Speed button is pressed, no signal is sent to air conditioner, and no change on LCD display.
    Auto Fan Speed for e-ion operation switches from SHi to Hi after 4 hours of operation.

- Airflow direction control
  - During any operation mode combines with e-ion operation, air flow direction follows respective operation mode.
  - During e-ion individual operation, only Auto Air Swing is allowed. Even if Air Swing button is pressed, no signal is sent to air conditioner, and no change on LCD display.

- Timer control
  - When ON timer activates when unit stops, previous operation resumes and restored last saved e-ion operation status.
  - When ON timer activates during any operation, no change and carry on current operation.
  - When OFF timer activates during any operation, all operation stops and the latest e-ion operation status is saved.

- Indicator
  - When e-ion operation starts, e-ion indicator ON.

- Remote Control Receiving Sound
  - Normal Operation ➔ e-ion Operation : Beep
  - e-ion Operation ➔ Normal Operation : Beep
  - Stop ➔ e-ion individual Operation : Beep
  - e-ion individual Operation ➔ Stop : Long Beep

- Power failure
  - During e-ion individual operation, if power failure occurs, after power resumes, e-ion individual operation resumes immediately.
  - During combination operation, if power failure occurs, after power resumes, combination operation resume immediately.
  - e-ion operation status is not memorized after OFF the unit. After OFF, when the operation is ON again, air conditioner operates without e-ion operation.

- e-ion Check Mode
  - e-ion abnormality check mode
  - Purpose is to improve sensor serviceability when sensor is malfunction.

    (1) Control starting condition

    When all of the conditions are formed
    - Not in Patrol Demo mode.
    - e-ion operation ON.
    - When e-ion check mode signal is received; the procedure of selection is as shown:
      - Press “Set” button continuously for 15 seconds by using pointer to enter internal setting mode.
      - Press “Timer Decrement" button to select “CHC”.
      - Confirm setting by pressing “Timer Set” button, a “beep” sound will be heard.

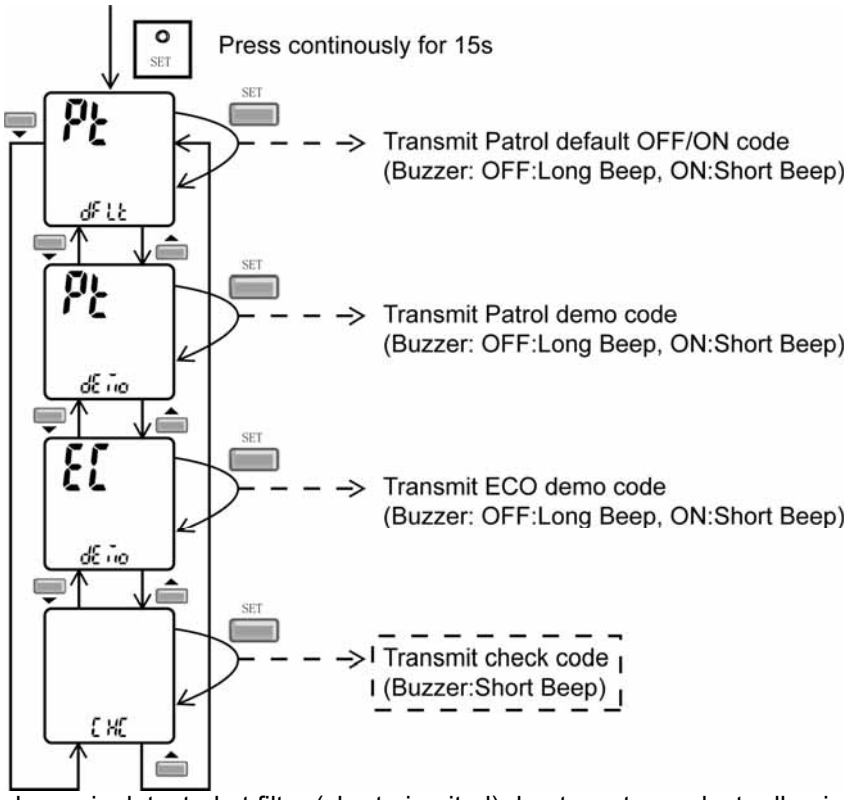

  - If abnormal discharge is detected at filter (short-circuited) due to water or dust adhesion, etc., the e-ion indicator blinks immediately.

- Error Detection Control

  When e-ion indicator blink, it indicates error listed below:
  - Active e-ion Air Purifying system PCB main connector open:
    - Judgment Method
      - During e-ion operation (include during Patrol operation), Active e-ion Air Purifying system main connector to PCB is opened.

    - Troubleshooting Methods
      - Connect the connector or stop operation (include during Patrol operation) to cancel the blinking.

  - Abnormal Discharge error:
    - Judgment Method
      - During e-ion operation, feedback voltage is-Lo (at microcontroller) is detected, it is judged abnormal discharge and stops power supplies to the Active e-ion Air Purifying system.
      - Abnormal discharge is caused by ionizer or filter’s high voltage power supply short-circuits due to water or dust adhesion, and so forth.
      - When abnormal discharge occurred, every 30 minutes the unit supplies power to the Active e-ion Air Purifying system.
      - When abnormal discharge occurs for 24 times continuously, e-ion indicator blinks (not applicable for e-ion Check Mode, where the error will shows immediately despite the 24 times counter)

- Troubleshooting Method
  - Press “PATROL/e-ion” button or “OFF/ON” button to stop the operation and check the Active e-ion Air Purifying system main connector to PCB.
  - After that, press “e-ion” button again to confirm the e-ion indicator not blinking.
  - The 24 times counter will be clear after 10 minutes of normal operation or when operation stops.

- Error Reset Method
  - Press “OFF/ON” button to OFF the operation.
  - Press AUTO OFF/ON button at indoor unit to OFF the operation.
  - OFF Timer activates
  - Power supply reset

- Active e-ion Air Purifying system breakdown error:
  - Judgment Method
    - When hi-feedback voltage (at microcontroller) supplied to filter during e-ion stop, Active e-ion Air Purifying system breakdown error shows immediately.
    - It is due to indoor PCB or filter’s high voltage power supply damage.
    - Operations except e-ion continue. Both Timer indicator and e-ion indicator blink.

  - Troubleshooting Method
    - Press “PATROL/e-ion” button or “OFF/ON” button to stop the operation.
    - Change main circuit board or filter’s high voltage power supply.
    - When lo-feedback voltage supplied to Active e-ion Air Purifying system during e-ion operation, e-ion indicator and Timer indicator stop blinking.

11.12 Mild Dry Cooling Operation

- This operation helps to prevent decreases in room humidity while maintaining the setting temperature.
- During unit running at Cooling operation mode, if “Mild Dry Cooling” button is pressed, Mild Dry Cooling operation starts and Mild Dry Cooling indicators turns ON at remote control display.
- Mild dry cooling operation is unavailable when the unit is operating Auto mode, Soft Dry mode, Patrol individual operation or e-ion individual operation.
- Mild dry cooling operation is cancelled when the unit turned OFF, pressed again Mild Dry Cooling button or when the operation mode changed from Cooling to other mode.
- Eco Patrol, Powerful, Quiet and Mild Dry Cooling mode cannot function at the same time, the unit will follows the operation according to the last signal received.
- During this operation, the compressor frequency changes according to operating condition to prevent room humidity decreases and when AUTO AIR SWING is set, the vertical airflow direction fixed at lower limit position.

11.13 ECO Patrol Operation

- A Pyoelectric infrared sensor is used to detect injection strength variation of infrared at setting area to determine the presence or absence of human and its activity level. Human detection area is shown in figure below:

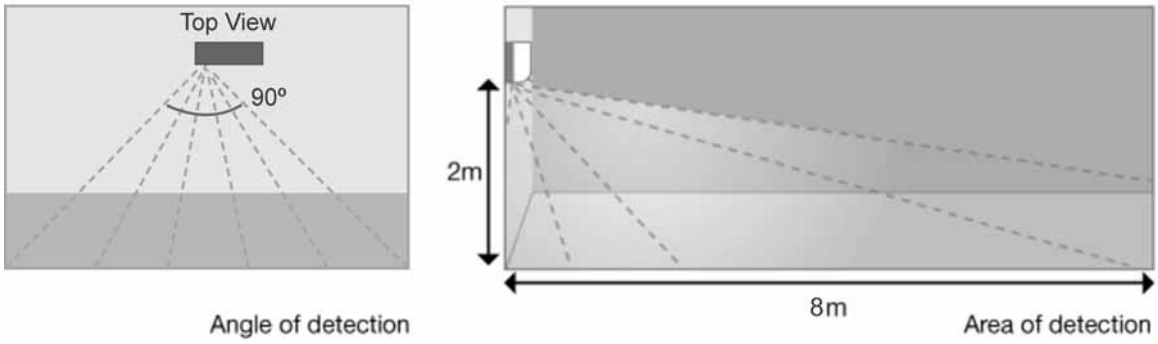

- ECO Patrol operation – Human presence/absence detection outlined flow

  Process infrared sensor output signal

  Human detection (movement) every 3 seconds.

  ▼

  Human detection records

  Records human detection (movement) result for 30 seconds and determine its activity level i.e. Hi/Lo.

  ▼

  Presence / absence detection

  Compares current and previous human detection result every 30 seconds to determine the presence or absence of human.

  ▼

  Presence / absence determination

  Based on human presence / absence detection, if human presence detection showed within 30 minutes, it is recognised that human is present. If human absence detection showed continuously for more than 30 minutes, it is recognised that no human is present.

- ECO Patrol Sensor abnormality detection

  (1) Connnector pulled out (disconnected), Wire cut Abnormality (Fix Output at Hi)

  a) Abnormal judgment start condition.
     Start from ECO Patrol Sensor power ON, and end after 30 seconds.
  b) Control content.
     Judge ECO Patrol Sensor power level every 100ms.
  c) Abnormal Judgment condition.
     When ECO Patrol Sensor has continues for 25 seconds Hi level.

  (2) Circuit Abnormal (Fix Output Lo)

  a) Abnormal judgment start condition.
     After ECO Patrol Sensor unit power ON, and after pressed 70 seconds.
  b) Control content.
     Judge ECO Patrol Sensor power level every 100ms.
  c) Abnormal Judgment condition.
     When ECO Patrol Sensor has continues at Lo level for 25 seconds.

  (3) Abnormal treatment

  Any one of the above self-diagnosis result is abnormal

  - Abnormal counter +1 and ECO Patrol Sensor power supply OFF.
  - After ECO Patrol Sensor unit power is OFF for 5 seconds, Retry the ECO Patrol operation.
  - When Abnormal counter reach 4 counts, ECO Patrol sensor abnormality is confirmed.
    (Abnormal counter is cleared when sensor power ON and maintain normal for 120 seconds and above or Clear Anormal counter by power reset)
  - Save ECO Patrol Sensor Abnormality H59 (no Timer LED blinking).
  - ECO Patrol Sensor operation OFF, but ECO Patrol LED maintain ON.
  - The unit still operate as normal.
  - Sensor error counter can be cleared only after power supply reset or AC Reset button on the remote
  - control is pressed.

- ECO Patrol Demo Mode
  - Press “Set” button continuously for 15 seconds by using pointer during Air Conditioner is OFF condition to enter internal setting mode.
  - Press “Timer Decrement" button to select “EC demo”.
  - Press “Timer Set” button to toggle ECO Patrol Demo mode.
    - Short “beep”: Turn ON ECO Patrol Demo mode.
    - Long “beep”: Turn OFF ECO Patrol Demo mode.

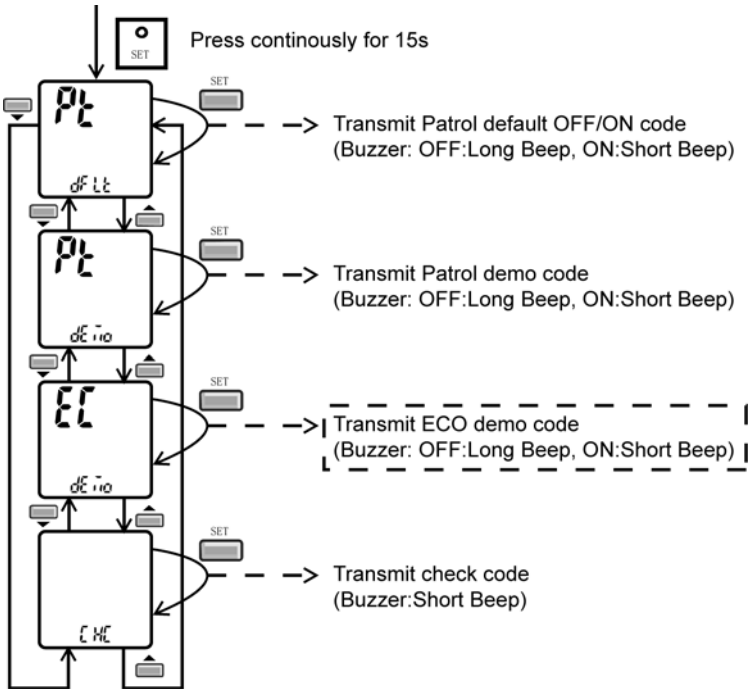

Control details:

- During ECO Patrol Demo mode, operation LED ON and horizontal vane will set to Auto Swing.
- When Hi activity judge, Fan speed change to Hi Fan and ECO Patrol LED ON.
- When Lo activity judge, Fan speed change to Lo Fan and ECO Patrol LED OFF.
- No setting temperature adjustment.

- During ECO Patrol operation, the internal setting temperature and fan speed are adjusted in order to provide comfort and energy saving.

- ECO Patrol Start condition.
  - Press ECO Patrol button to select ECO1 and ECO2.

- ECO Patrol Stop condition.
  - Press ECO Patrol button again.
  - OFF Timer activates.
  - Press OFF/ON button to turn off the air conditioner.
  - Press AUTO OFF/ON button to turn off the air conditioner.
  - Press POWERFUL/QUIET button.
  - Press Mild Dry Cooling button.

- ECO Patrol operation could ON when any of the following conditions is fulfilled:
  - During forced cooling or forced heating operation.
  - During e-ion or individual patrol operation.

- Power Failure
  - ECO Patrol operation will be resuming after recovered from power failure.

- Timer Operation
  - When unit is turn on by ON Timer and ECO Patrol operation is ON during previous operation before OFF, ECO Patrol operation will not be ON automatically.
  - When unit is turn on by ON Timer and ECO Patrol operation is OFF during previous operation before OFF, ECO Patrol operation will not be ON automatically.

- Other Information
  - ECO Patrol, Powerful, Quiet and Mild Dry Cooling cannot be operated at the same time.
  - ECO Patrol sensor initialized time is 70 seconds from power supplied to ECO Patrol sensor, or 70 seconds from the operation start.

- ECO 1 Operation

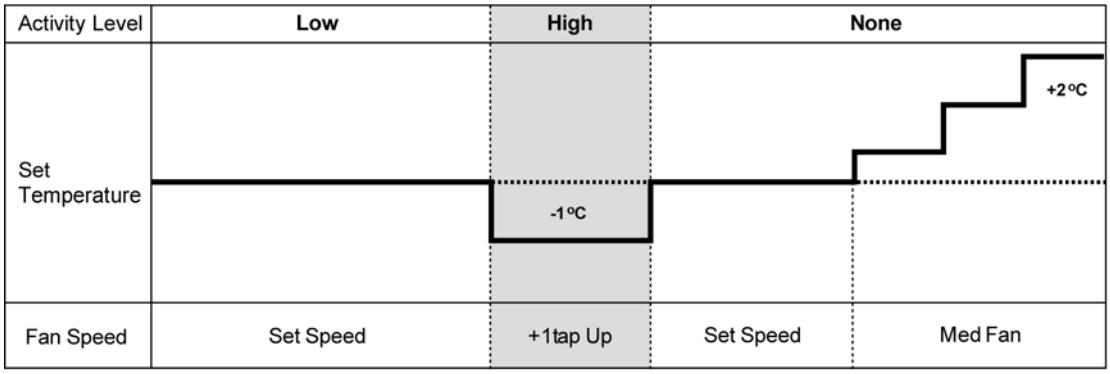

- ECO 2 Operation

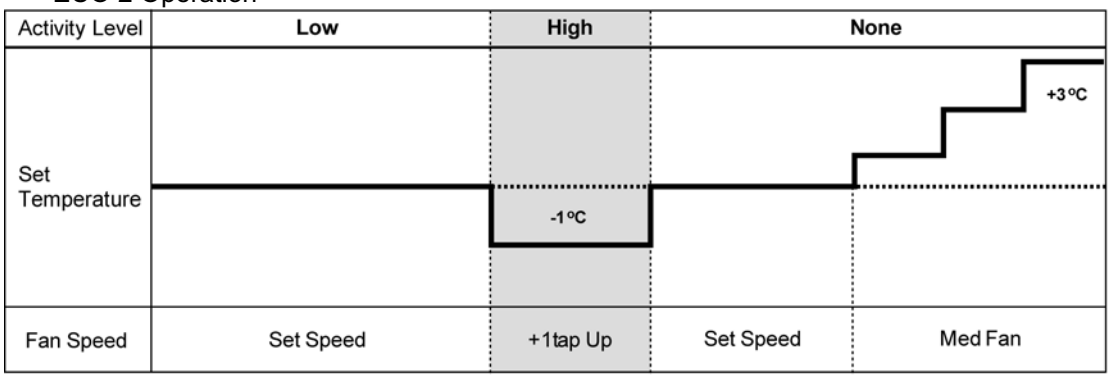

- ECO Patrol Sensor abnormality check mode

- Purpose is to improve sensor serviceability when sensor is malfunction.
  (1) Control starting condition
  When all of the conditions are formed
  - Not in ECO Patrol Demo mode.
  - ECO Patrol mode ON.
  - When ECO Patrol sensor check mode signal is received; the procedure of selection is as shown:
    - Press “Set” button continuously for 15 seconds by using pointer to enter internal setting mode.
    - Press “Timer Decrement" button to select “CHC”.
    - Confirm setting by pressing “Timer Set” button, a “beep” sound will be heard.

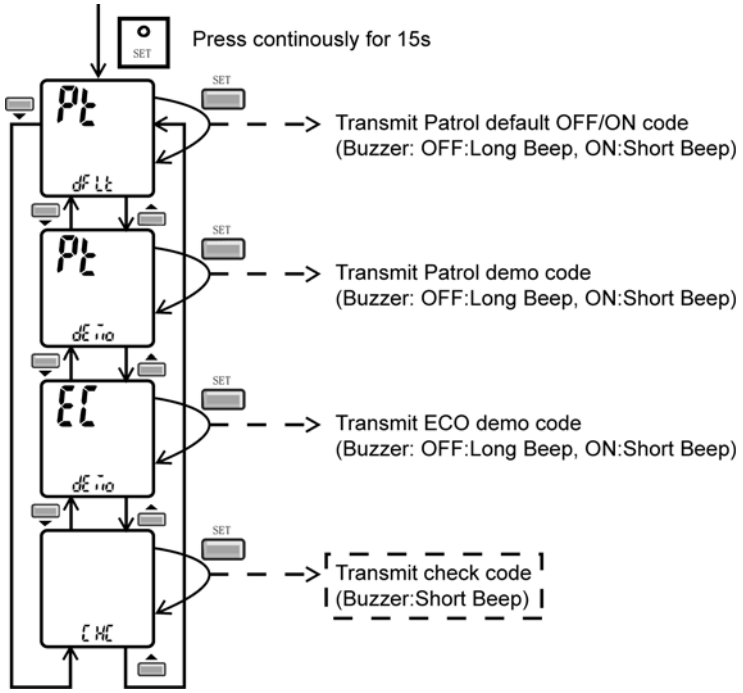

  (2) Control ending condition.
  When any of the conditions are formed
  - Operation stops.
  - “Timer Cancel” button pressed.
  - When ECO Patrol sensor check mode signal is not received for more than 30 seconds.

  (3) Control content.
  - During ECO Patrol mode ON, when check signal is received, if (1) or (2) is detected.
    ECO Patrol LED start blinking (ECO Patrol sensor operation stops but the unit operates as normal) and ECO Patrol sensor abnormal code is memorized (the 4 times counter is ignored)
  - The blinking of ECO Patrol LED can be cancelled by pressing ECO Patrol button again.
  - Sensor error counter can be cleared only after power supply reset or “AC Reset” button on remote control is pressed.

However, if there is no ECO Patrol sensor abnormally happen, ECO Patrol sensor operation will continues as normal.

12 Protection Control

12.1 Restart Control (Time Delay Safety Control)

- The compressor will not turn on within 3 minutes from the moment operation stops, although the unit is turned on again by pressing OFF/ON button at remote control within this period.
- This control is not applicable if the power supply is cut off and on again.
- This phenomenon is to balance the pressure inside the refrigerant cycle.

12.2 30 Seconds Forced Operation

- Once the air conditioner is turned on, the compressor will not stop within 30 seconds in a normal operation although the intake air temperature has reached the thermo-off temperature. However, force stop by pressing the OFF/ON button at the remote control is permitted or the Auto OFF/ON button at indoor unit.
- The reason for the compressor to force operation for minimum 30 seconds is to allow the refrigerant oil run in a full cycle and return back to the outdoor unit.

12.3 Total Running Current Control

- When the outdoor unit total running current (AC) exceeds X value, the frequency instructed for compressor operation will be decreased.
- If the running current does not exceed X value for 5 seconds, the frequency instructed will be increased.
- However, if total outdoor unit running current exceeds Y value, compressor will be stopped immediately for 3 minutes.

Model	S9***		S12***		S18***		S24***	
Operation Mode	X (A)	Y (A)	X (A)	Y (A)	X (A)	Y (A)	X (A)	Y (A)
Cooling / Soft Dry (A)	5.5	15.0	7.3	15.0	9.2	15.0	11.1	19.0
Cooling / Soft Dry (B)	4.9	15.0	6.7	15.0	8.1	15.0	10.3	19.0

- The first 30 minutes of cooling operation, (A) will be applied.

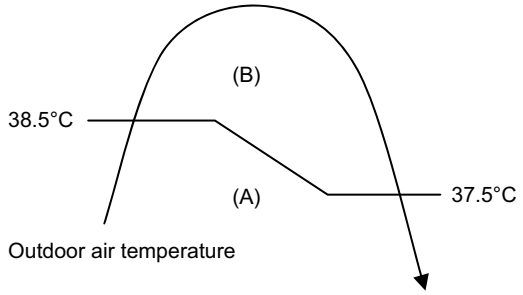

12.4 IPM (Power Transistor) Prevention Control

12.4.1 S9KK, S12KK

- Overheating Prevention Control
  - When the IPM temperature rises to 100°C, compressor operation will stop immediately.
  - Compressor operation restarts after 3 minutes the temperature decreases to 95°C.
- DC Peak Current Control
  - When electric current to IPM exceeds set value of 18.5A, the compressor will stop operate. Then, operation will restart after 3 minutes.
  - If the set value exceeds again more than 30 seconds after the compressor starts, the operation will restart after 2 minutes.
  - If the set value exceeds again within 30 seconds after the compressor starts, the operation will restart after 1 minute. If this condition repeats continuously for 7 times, all indoor and outdoor relays will be cut off.

12.4.2 S18KK, S24KK

- Overheating Prevention Control
  - When the IPM temperature rises to 100°C, compressor operation will stop immediately.
  - Compressor operation restarts after 3 minutes the temperature decreases to 95°C.
- DC Peak Current Control
  - When electric current to IPM exceeds set value of 18.5A, the compressor will stop operate.
    - During operation starts, if the DC peak current is detected after 30 seconds, the operation will restart after 2 minutes.
    - During operation starts, if the DC peak current is detected within 30 seconds, the operation will restart after 1 minute.
  - After compressor starts for 30 seconds, if DC peak current is detected exceeding 18.5A and this condition repeats continuously for 7 times, all indoor and outdoor relays will be cut off. Timer LED blinks and “F99” indicated.

12.5 Compressor Overheating Prevention Control (For S18, S24KK only)

- Instructed frequency for compressor operation will be regulated by compressor discharge temperature. The changes of frequency are as below.
- If compressor discharge temperature exceeds 112°C, compressor will be stopped, occurs 4 times per 20 minutes, timer LED will be blinking. “F97” is indicated.

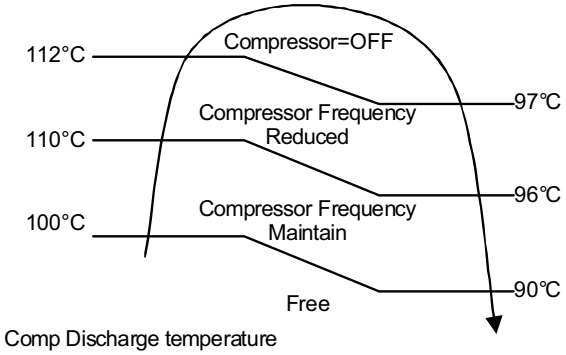

12.6 Low Pressure Prevention Control (Gas Leakage Detection)

- Control start conditions
  - For 5 minutes, the compressor continuously operates and outdoor total current is between 0.65A and 1.65A.
  - During Cooling and Soft Dry operation:
    Indoor suction temperature – indoor piping temperature is below 4°C
- Control contents
  - Compressor stops (and restart after 3 minutes).
  - If the conditions above happened 2 times within 20 minutes, the unit will:
    - Stop operation
    - Timer LED blinks and “F91” indicated.

12.7 Compressor Tank Temperature Rise Protection Control

- Control start conditions
  - For 5 minutes, the compressor continuously operates and outdoor total current is between 0.65A and 1.65A.
  - During Cooling and Soft Dry operation:
    - Indoor suction temperature -indoor piping temperature is below 4°C.
    - Indoor temperature and outdoor temperature is 30±5°C.
    - Remote Control setting 16°C and Hi Fan Speed.
- Control contents
  - Compressor stops (and restart after 3 minutes)
  - If the conditions above happened 2 times within 20 minutes, the unit will:
    - Stop operation
    - Timer LED blinks and “F91” indicated.

12.8 Low Frequency Protection Control 1

- When the compressor operates at frequency lower than 24Hz continued for 20 minutes, the operation frequency will be changed to 23Hz for 2 minutes.

12.9 Low Frequency Protection Control 2

- When all below conditions comply, the compressor frequency will changed to lower frequency.

Temperature, T, for:	Cooling / Soft Dry
Indoor intake air (°C)	T < 15 or T ≥ 30
Outdoor air (°C)	T < 16 or T ≥ 38
Indoor heat exchanger (°C)	T < 30

12.10 Outdoor Air Temperature Control

- The compressor operating frequency is regulated in accordance to the outdoor air temperature as shown in the diagram below.
- This control will begin 1 minute after the compressor starts.
- Compressor frequency will adjust based on outdoor air temperature.

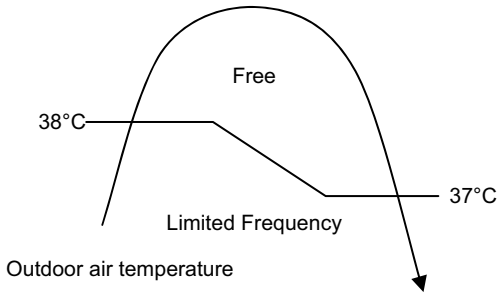

12.11 Cooling Overload Control

- Pipe temperature limitation / restriction.
  - Detects the outdoor pipe temperature and carry out restriction / limitation below (Limit the compressor operation frequency)
  - The compressor stops if outdoor pipe temperature exceeds 61°C.
  - If the compressor stops 4 times in 20 minutes, Timer LED blinks (“F95” indicated: Outdoor high pressure rise protection)

12.12 Freeze Prevention Control

- When indoor heat exchanger temperature is lower than 0°C continuously for 6 minutes, compressor will stops operation.
- Compressor will resume its operation 3 minutes after the indoor heat exchanger is higher than 13°C.
- At the same time, indoor fan speed will be higher than during its normal operation.
- If the indoor heat exchanger temperature is higher than 13°C for 5 minutes, the fan speed will return to its normal operation.

12.13 Freeze Prevention Control 2

- Control start conditions
  - During Cooling operation and soft dry operation
    - During thermo OFF condition, indoor intake temperature is less than 10°C or
    - Compressor stops for freeze prevention control
  - Either one of the conditions above occurs 5 times in 60 minutes.
- Control contents
  - Operation stops
  - Timer LED blinks and “H99” indicated

12.14 Dew Prevention Control

- To prevent dew formation at indoor unit discharge area.
- This control will be activated if:
  - Cooling mode or Quiet mode is activated.
  - Remote control setting temperature is less than 25°C.
  - Fan Speed is at CLo or QLo.
  - Room temperature is constant (±1°C) for 30 minutes.
  - Compressor is continuously running.
- Fan speed will be adjusted accordingly in this control.
  - Fan speed will be increased slowly if the unit is in quiet mode but no change in normal cooling mode.

12.15 Odor Cut Control

- To reduce the odor released from the unit.
  - Start Condition
    - AUTO FAN Speed is selected during COOL or DRY operation.
    - During freeze prevention control and timer preliminary operation, this control is not applicable.
  - Control content
    - Depends on compressor conditions:
      1. Compressor OFF → Compressor ON.
         The indoor unit fan stops temporarily and then starts to blow at minimum airflow for 30 seconds.
      2. Compressor ON → Compressor OFF.
         The indoor unit fan stops for 90 seconds and then blows at minimum airflow for 20 seconds.

13 Servicing Mode

13.1 Auto Off/On Button

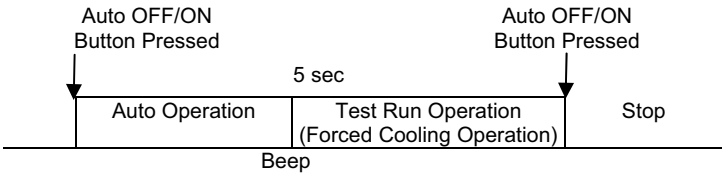

1 AUTO OPERATION MODE
The Auto Operation will be activated immediately once the Auto OFF/ON button is pressed. This operation can be used to operate air conditioner with limited function if remote control is misplaced or malfunction.

2 TEST RUN OPERATION (FOR PUMP DOWN/SERVICING PURPOSE)
The Test Run Operation will be activated if the Auto OFF/ON button is pressed continuously for more than 5 seconds. A “beep” sound will be heard at the fifth seconds, in order to identify the starting of this operation.

The Auto OFF/ON button may be used together with remote control to set / change the advance setting of air conditioner operation.

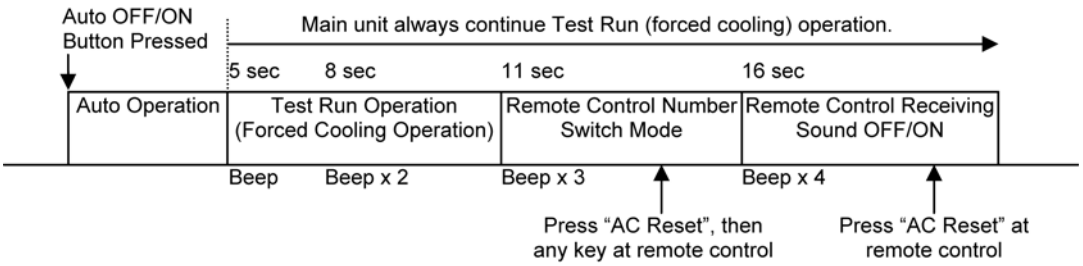

3 REMOTE CONTROL NUMBER SWITCH MODE
The Remote Control Number Switch Mode will be activated if the Auto OFF/ON button is pressed continuously for more than 11 seconds (3 “beep” sounds will occur at 11th seconds to identify the Remote Control Number Switch Mode is in standby condition), press “AC Reset” button and then press any button at remote control to transmit and store the desired transmission code to the EEPROM.

There are 4 types of remote control transmission code could be selected. The indoor unit will only operate when received signal with same transmission code from remote control. This could prevent signal interference when there are 2 or more units installed nearby together.

To change remote control transmission code, short or open jumpers at the remote control printed circuit board.

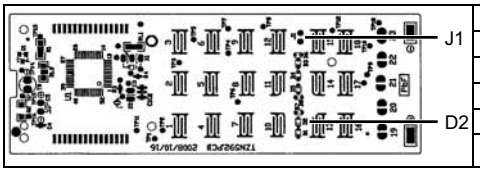

Remote Control Printed Circuit Board		
Jumper A (J1)	Jumper B (D2)	Remote Control No.
Short	Open	A (Default)
Open	Open	B
Short	Short	C
Open	Short	D

4 REMOTE CONTROL RECEIVING SOUND OFF/ON MODE
The Remote Control Receiving Sound OFF/ON Mode will be activated if the Auto OFF/ON button is pressed continuously for more than 16 seconds (4 “beep” sounds will occur at 16th seconds to identify the Remote Control Receiving Sound OFF/ON Mode is in standby condition) and press “AC Reset” button at remote control.

Press Auto OFF/ON button to toggle remote control receiving sound.
- Short “beep”: Turn OFF remote control receiving sound.
- Long “beep”: Turn ON remote control receiving sound.

After Auto OFF/ON button is pressed, the 20 seconds counter for Remote Control Receiving Sound OFF/ON Mode is restarted.

13.2 Remote Control Button

13.2.1 SET Button

- To check remote control transmission code and store the transmission code to EEPROM
  - Press “Set” button continuously for 10 seconds by using pointer
  - Press “Timer Set” button unit a “beep” sound is heard as confirmation of transmission code change.
- To change the air quality sensor:
  - Press and release by using pointer
  - Press the “Timer Decrement” button to select sensitivity:
    1. Low sensitivity
    2. Standard (Default)
    3. Hi sensitivity
  - Confirm setting by pressing “Timer Set” button, a “beep” sound will be heard. LCD returns to original display after 2 seconds.
  - LCD returns to original display if remote control does not operate for 30 seconds.

13.2.2 RESET (RC)

- To clear and restore the remote control setting to factory default.
  - Press once to clear the memory

13.2.3 RESET (AC)

- To restore the unit’s setting to factory default.
  - Press once to restore the unit’s setting

13.2.4 TIMER ▲

- To change indoor unit indicators’ intensity:
  - Press continuously for 5 seconds.

13.2.5 TIMER ▼

- To change remote control display from Degree Celsius (°C) to Degree Fahrenheit (°F)
  - Press continuously for 10 seconds.

14 Troubleshooting Guide

14.1 Refrigeration Cycle System

In order to diagnose malfunctions, ensure the air conditioner is free from electrical problems before inspecting the refrigeration cycle. Such problems include insufficient insulation, problem with the power source, malfunction of a compressor and a fan. The normal outlet air temperature and pressure of the refrigeration cycle depends on various conditions, the standard values for them are shown in the table to the right.

Normal Pressure and Outlet Air Temperature (Standard)

	Gas Pressure Mpa (kg/cm^2G)	Outlet air Temperature (°C)
Cooling Mode	0.9 ~ 1.2 (9 ~ 12)	12 ~ 16

Condition: Indoor fan speed = High
Outdoor temperature = 35°C at cooling mode.
Compressor operate at rated frequency

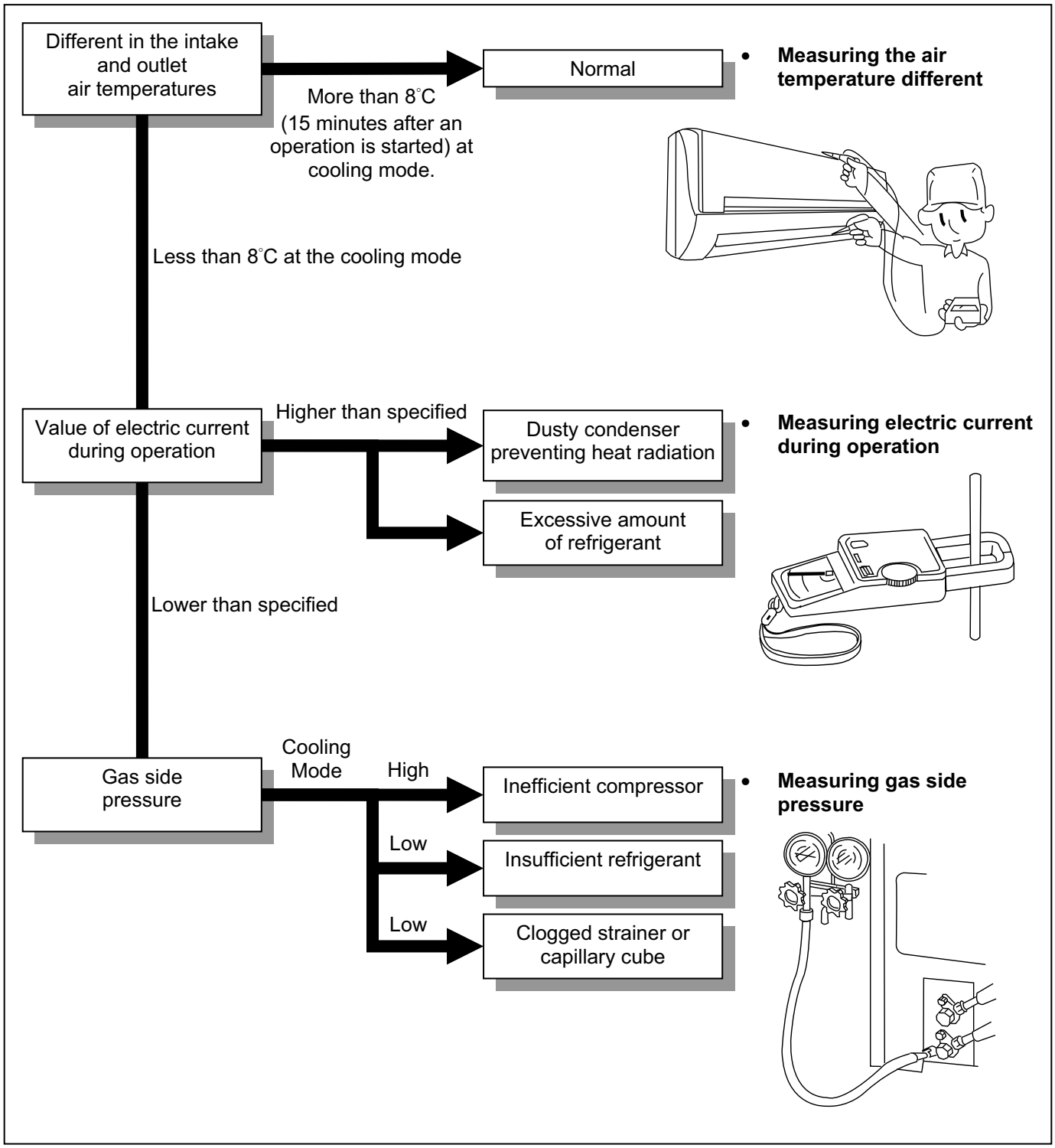

14.1.1 Relationship between the condition of the air conditioner and pressure and electric current

Condition of the air conditioner	Cooling Mode		
	Low Pressure	High Pressure	Electric current during operation
Insufficient refrigerant (gas leakage)	↘	↘	↘
Clogged capillary tube or strainer	↘	↘	↘
Short circuit in the indoor unit	↘	↘	↘
Heat radiation deficiency of the outdoor unit	↗	↗	↗
Inefficient compression	↗	↘	↘

- Carry out the measurement of pressure, electric current, and temperature fifteen minutes after an operation is started.

14.2 Breakdown Self Diagnosis Function

14.2.1 Self Diagnosis Function (Three Digits Alphanumeric Code)

- Once error occurred during operation, the unit will stop its operation, and Timer LED blinks.
- Although Timer LED goes off when power supply is turned off, if the unit is operated under a breakdown condition, the LED will ON again.
- In operation after breakdown repair, the Timer LED will not blink. The last error code (abnormality) will be stored in IC memory.

14.2.2 To Make a Diagnosis

1 Timer LED starts to blink and the unit automatically stops the operation.
2 Press the CHECK button on the remote control continuously for 5 seconds.
3 "- -" will be displayed on the remote control display.
Note: Display only for "- -" (No signal transmission, no receiving sound and no Power LED blinking)
4 Press the TIMER ▲ or ▼ button on the remote control. The code "H00" (no abnormality) will be displayed and signal will be transmit to the main unit.
5 Each press of the button (▲ or ▼) will increase error code number and transmit error code signal to the main unit.
6 When the latest abnormality code on the main unit and code transmitted from the remote control are matched, Power LED will light up for 30 seconds and a "beep" sound (continuously for 4 seconds) will be heard. If no codes are matched, Power LED will light up for 0.5 seconds and no sound will be heard.
7 The breakdown diagnosis mode will be canceled unless pressing the CHECK button continuously for 5 seconds or operating the unit for 30 seconds.
8 The LED will be off if the unit is turned off or the RESET button on the main unit is pressed.

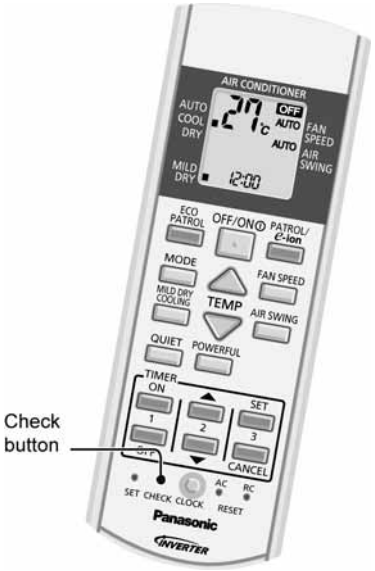

14.2.3 To Display Memorized Error Code (Protective Operation)

1 Turn power on.
2 Press the CHECK button on the remote control
3 "- -" will be displayed on the remote control display.
Note: Display only for "- -" (No signal transmission, no receiving sound and no Power LED blinking)
4 Press the TIMER ▲ or ▼ button on the remote control. The code "H00" (no abnormality) will be displayed and signal will be transmit to the main unit.
5 Each press of the button (▲ or ▼) will increase error code number and transmit error code signal to the main unit.
6 When the latest abnormality code on the main unit and code transmitted from the remote control are matched, Power LED will light up for 30 seconds and a "beep" sound (continuously for 4 seconds) will be heard. If no codes are matched, Power LED will light up for 0.5 seconds and no sound will be heard.
7 The breakdown diagnosis mode will be canceled unless pressing the CHECK button continuously for 5 seconds or operating the unit for 30 seconds.
8 The same diagnosis can be repeated by turning power on again.

14.2.4 To Clear Memorized Error Code after Repair (Protective Operation)

1 Turn power on (in standby condition).
2 Press the AUTO button for 5 seconds (a "beep" sound is heard) on the main unit to operate the unit at Forced Cooling Operation Mode.
3 Press the CHECK button on the remote control for about 1 second with a pointed object to transmit signal to main unit. A "beep" sound is heard, and the Error Code is cleared.

14.2.5 Temporary Operation (Depending On Breakdown Status)

1 Press the Auto OFF/ON button on the main unit (a "beep" sound is heard) to operate the unit. (Remote control is enable again).
2 The unit can be temporarily be used until repaired.

Error Code	Operation	Temporary items
H23	Cooling	Emergency Operation with limited power
H27, H28	Cooling	

14.3 Error Code Table

Diagnosis display	Abnormality / Protection control	Abnormality Judgment	Emergency Operation	Primary location to verify
H00	No abnormality detected	-	Normal operation	
H11	Indoor / Outdoor abnormal communication	> 1 min after starting operation	Indoor fan operation only	• Internal / external cable connection • Indoor / outdoor PCB
H12	Connection capability rank abnormality	Continuously for 90 sec after power supplied	-	-
H14	Indoor intake air temperature sensor abnormality	Continue for 5 sec.	-	• Intake air temperature sensor (defective or disconnected)
H15	Outdoor compressor temperature sensor abnormality	Continue for 5 sec.	-	• Compressor temperature sensor (defective or disconnected)
H16	Outdoor current transformer open circuit	-	-	• Outdoor PCB • IPM (Power transistor) module
H19	Indoor fan motor mechanism locked	7 occurrences continuously	-	• Indoor PCB • Fan motor
H23	Indoor heat exchanger temperature sensor abnormality	Continue for 5 sec.	○	• Heat exchanger temperature sensor (defective or disconnected)
H25	e-ion abnormality	-	○	• Indoor PCB • e-ion PCB
H27	Outdoor air temperature sensor abnormality	Continue for 5 sec.	○	• Outdoor temperature sensor (defective or disconnected)
H28	Outdoor heat exchanger temperature sensor abnormality	Continue for 5 sec.	○	• Outdoor heat exchanger temperature sensor (defective or disconnected)
H30	Discharge temperature sensor abnormality	Continue for 5 sec.		• Outdoor discharge temperature sensor (defective or disconnected)
H33	Indoor / outdoor wrong connection	-	-	• Indoor / outdoor supply voltage
H38	Indoor / outdoor mismatch (brand code)	-	-	-
H58	Gas sensor abnormality	Continue for 6 hours	○	• Gas sensor (defective or disconnected)
H59	Eco Patrol sensor abnormality	Continue for 70 sec.	○	• Eco Patrol sensor (defective or disconnected) • Eco Patrol PCB
H97	Outdoor fan lock abnormality	2 occurrences within 30 minutes		• Outdoor fan motor locked
H98	Indoor temperature rise abnormality	-	-	• Air filter dirty • Air circulation short circuit
H99	Indoor heat exchanger freeze prevention protection	-	-	• Insufficient refrigerant • Air filter dirty
F11	4 way valve switching failure *	4 occurrences within 30 minutes	-	• 4-way valve • v-coil
F90	System and compressor microcomputer communication error(for S10*** only)	2 occurrences within 5 seconds	-	• Compressor • Outdoor PCB
F90	Power factor correction abnormality	4 occurrences within 20 minutes	-	• Outdoor PCB
F91	Refrigerant cycle abnormal	2 occurrences within 20 minutes	-	• No refrigerant (3-way valve is closed)
F93	Outdoor compressor abnormal revolution	4 occurrences within 20 minutes	-	• Outdoor compressor
F95	Cooling high pressure protection	4 occurrences within 20 minutes	-	• Outdoor refrigerant circuit
F96	Intelligent power transistor overheating protection	-	-	• Excess refrigerant • Improper heat radiation • IPM (Power transistor)
F97	Compressor temperature rise protection control	4 occurrences within 20 minutes	-	• Insufficient refrigerant • Compressor
F98	Total running current protection	3 occurrences within 20 minutes	-	• Excess refrigerant • Improper heat radiation
F99	Outdoor direct current (DC) peak detection	7 occurrences continuously	-	• Outdoor PCB • IPM (Power transistor) • Compressor

Note:
"○" – Frequency measured and fan speed fixed
" * "– For cooling only model, it is the indication when indoor heat exchanger sensor or indoor air intake sensor has abnormality.

The memory data of error code is erased when the power supply is cut off, or press the Auto Switch until "beep" sound heard following by pressing the CHECK button at remote control.
Although operation forced to stop when abnormality detected, emergency operation is possible for certain errors (refer to Error Code Table) by using remote control or Auto OFF/ON button at indoor unit. However, the remote control signal receiving sound is changed from one "beep" to four "beep" sounds.

14.4 Troubleshooting Flowchart

14.4.1 H11 (Indoor/Outdoor Abnormal Communication)

Malfunction Decision Conditions

- During startup and operation of cooling and heating, the data received from outdoor unit in indoor unit signal transmission is checked whether it is normal.

Malfunction Caused

- Faulty indoor unit PCB.
- Faulty outdoor unit PCB.
- Indoor unit-outdoor unit signal transmission error due to wrong wiring.
- Indoor unit-outdoor unit signal transmission error due to breaking of wire in the connection wires between the indoor and outdoor units.
- Indoor unit-outdoor unit signal transmission error due to disturbed power supply waveform.

Troubleshooting

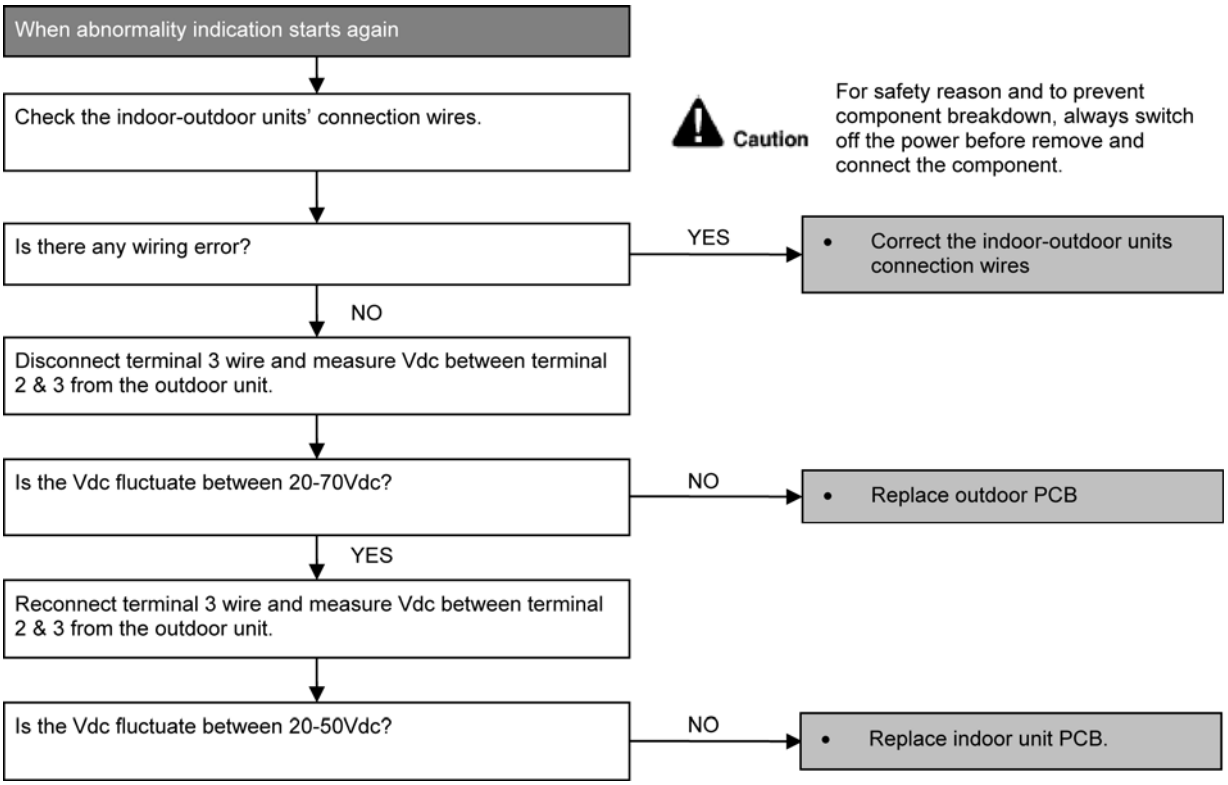

14.4.2 H12 (Indoor/Outdoor Capacity Rank Mismatched)

Malfunction Decision Conditions

- During startup, error code appears when different types of indoor and outdoor units are interconnected.

Malfunction Caused

- Wrong models interconnected.
- Wrong indoor unit or outdoor unit PCBs mounted.
- Indoor unit or outdoor unit PCBs defective.
- Indoor-outdoor unit signal transmission error due to wrong wiring.
- Indoor-outdoor unit signal transmission error due to breaking of wire 3 in the connection wires between the indoor and outdoor units.

Troubleshooting

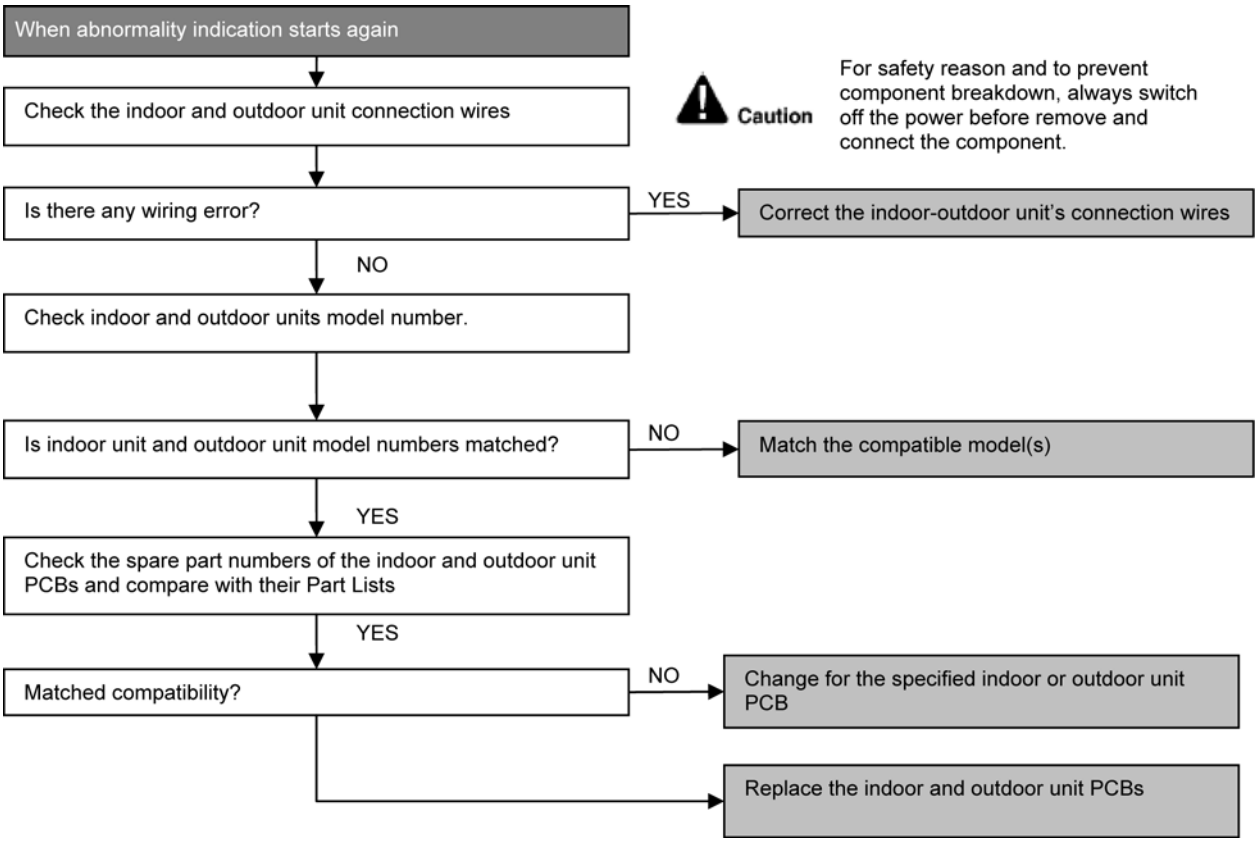

14.4.3 H14 (Indoor Intake Air Temperature Sensor Abnormality)

Malfunction Decision Conditions

- During startup and operation of cooling and heating, the temperatures detected by the indoor intake air temperature sensor are used to determine sensor errors.

Malfunction Caused

- Faulty connector connection.
- Faulty sensor.
- Faulty PCB.

Troubleshooting

When abnormality indication starts again

Check the connector connection:
- Turn off the power
- Check the connector connection

Caution: For safety reason and to prevent component breakdown, always switch off the power before remove and connect the component.

Is the connector connection normal?

NO →
- Connector poor contact
- Correct the connection

YES ↓

Check the indoor intake air temperature sensor:
- Plug out connector from the indoor unit PCB
- Measure the resistance of the indoor intake air temperature sensor

Is the measured resistance of the indoor intake air temperature sensor matches the value specified in its characteristic chart?

NO →
- Defect in indoor intake air temperature sensor
- Replace the indoor intake air temperature sensor

YES →
- Defect in indoor unit PCB
- Replace the indoor unit PCB

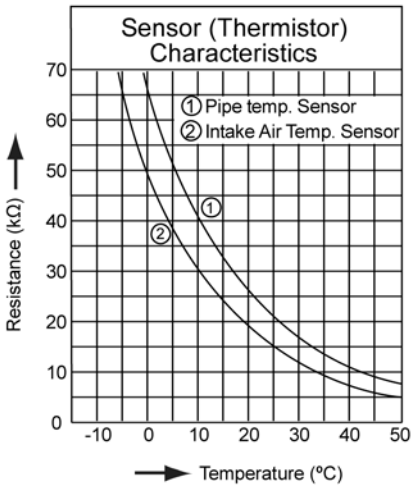

14.4.4 H15 (Compressor Temperature Sensor Abnormality)

Malfunction Decision Conditions

- During startup and operation of cooling and heating, the temperatures detected by the outdoor compressor temperature sensor are used to determine sensor errors.

Malfunction Caused

- Faulty connector connection.
- Faulty sensor.
- Faulty PCB.

Troubleshooting

When abnormality indication starts again

↓

Check the connector connection:
- Turn off the power
- Check the connector connection

Caution: For safety reason and to prevent component breakdown, always switch off the power before remove and connect the component.

↓

Is the connector connection normal?

NO →
- Connector poor contact
- Correct the connection

YES ↓

Check the outdoor compressor temperature sensor:
- Plug out connector from the outdoor unit PCB
- Measure the resistance of the outdoor compressor temperature sensor

↓

Is the measured resistance of the outdoor compressor temperature sensor matches the value specified in its characteristic chart?

NO →
- Defect in outdoor compressor temperature sensor
- Replace the outdoor compressor temperature sensor

YES →
- Defect in outdoor unit PCB
- Replace the outdoor unit PCB

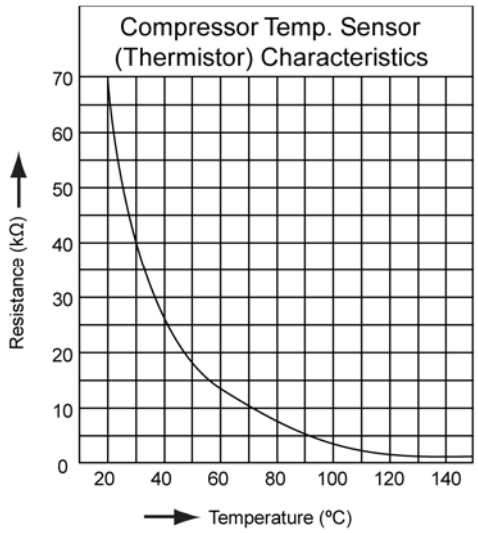

14.4.5 H16 (Outdoor Current Transformer Open Circuit)

Malfunction Decision Conditions

- A current transformer (CT) is detected by checking the compressor running frequency (≥ rated frequency) and CT detected input current (less than 1.14A) for continuously 20 seconds.

Malfunction Caused

- CT defective
- Outdoor PCB defective
- Compressor defective (low compression)

Troubleshooting

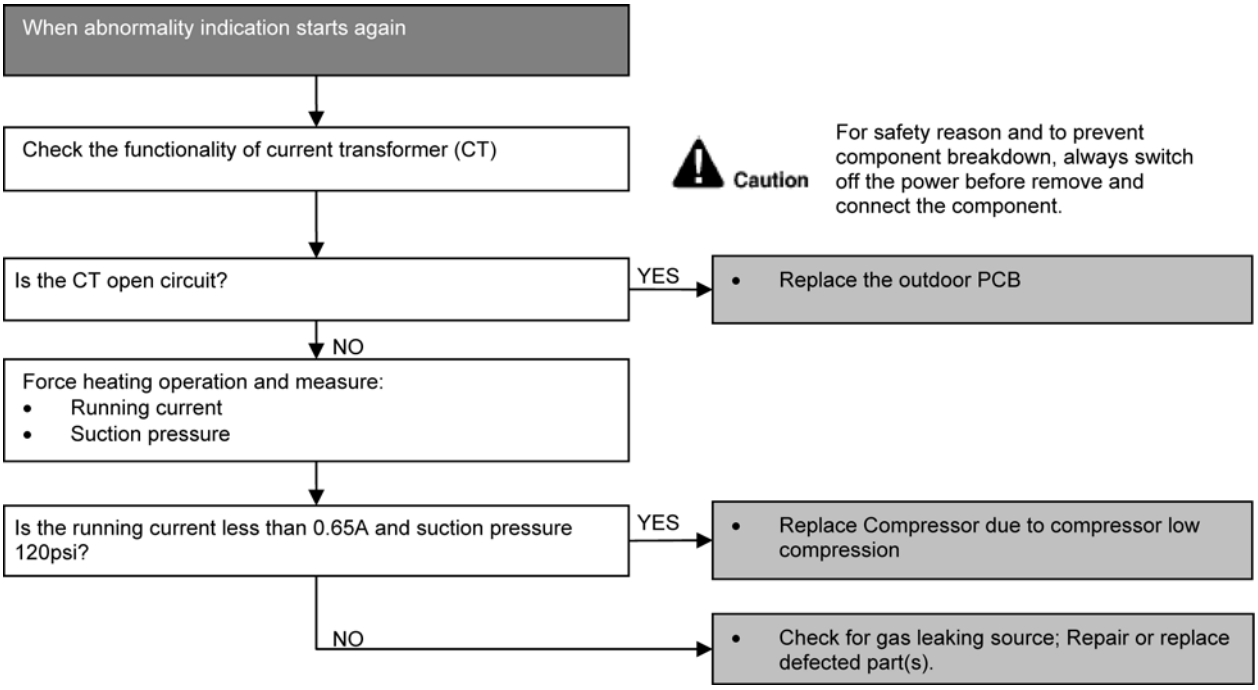

14.4.6 H19 (Indoor Fan Motor – DC Motor Mechanism Locked)

Malfunction Decision Conditions

- The rotation speed detected by the Hall IC during fan motor operation is used to determine abnormal fan motor (feedback of rotation > 2550rpm or < 50rpm)

Malfunction Caused

- Operation stops due to short circuit inside the fan motor winding.
- Operation stops due to breaking of wire inside the fan motor.
- Operation stops due to breaking of fan motor lead wires.
- Operation stops due to Hall IC malfunction.
- Operation error due to faulty indoor unit PCB.

Troubleshooting

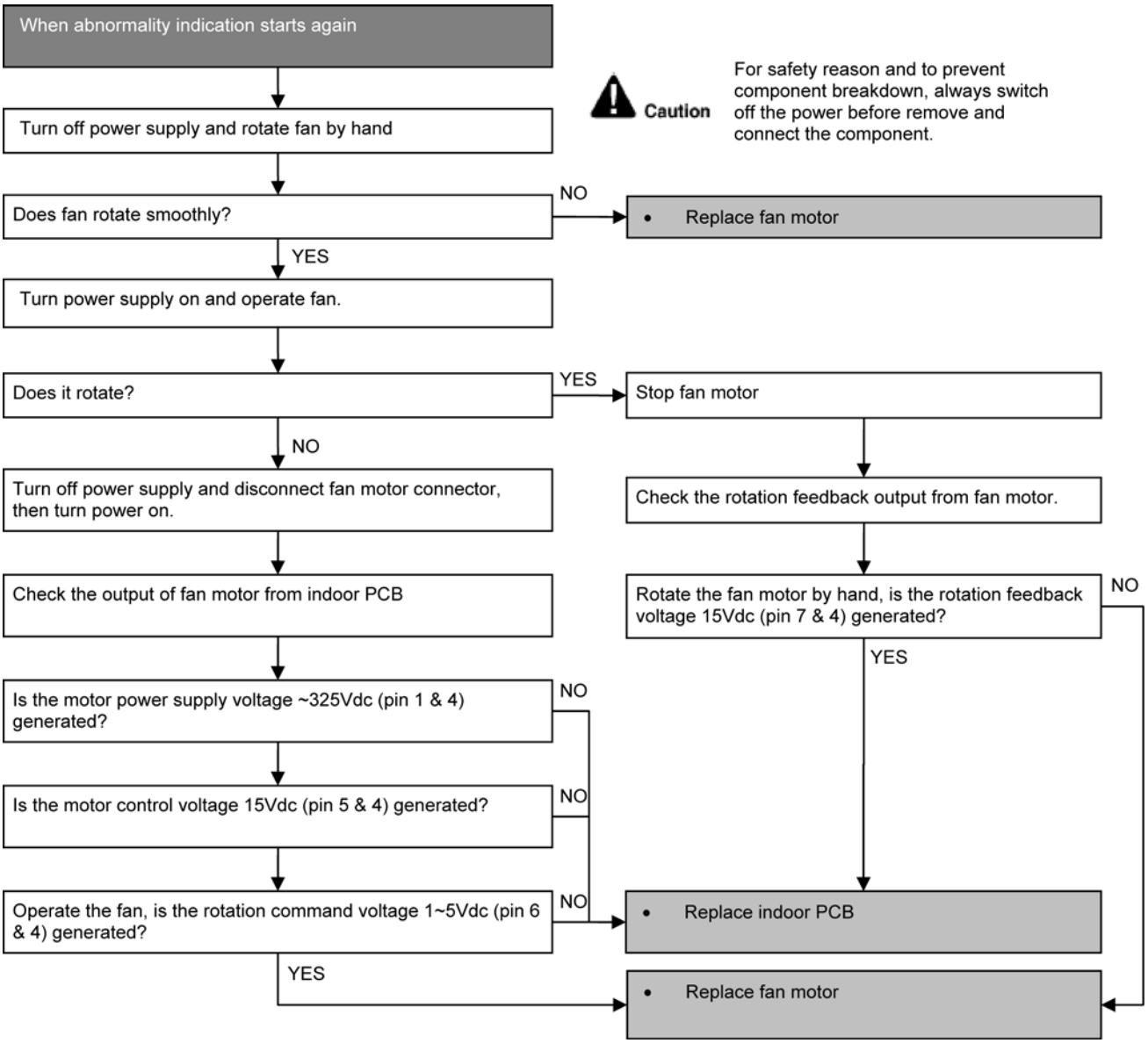

14.4.7 H23 (Indoor Pipe Temperature Sensor Abnormality)

Malfunction Decision Conditions

- During startup and operation of cooling and heating, the temperatures detected by the indoor heat exchanger temperature sensor are used to determine sensor errors.

Malfunction Caused

- Faulty connector connection.
- Faulty sensor.
- Faulty PCB.

Troubleshooting

When abnormality indication starts again

Check the connector connection:
- Plug out connector from the indoor unit PCB
- Measure the resistance of the indoor pipe temperature sensor

Caution: For safety reason and to prevent component breakdown, always switch off the power before remove and connect the component.

Is the connector connection normal?

NO →
- Connector poor contact
- Correct the connection

YES ↓

Check the outdoor air temperature sensor:
- Plug out connector from the outdoor unit PCB
- Measure the resistance of the outdoor intake air temperature sensor

Is the measured resistance of the outdoor intake air temperature sensor matches the value specified in its characteristic chart?

NO →
- Defect in outdoor intake air temperature sensor
- Replace the outdoor intake air temperature sensor

YES →
- Detect in outdoor unit PCB
- Replace the outdoor unit PCB

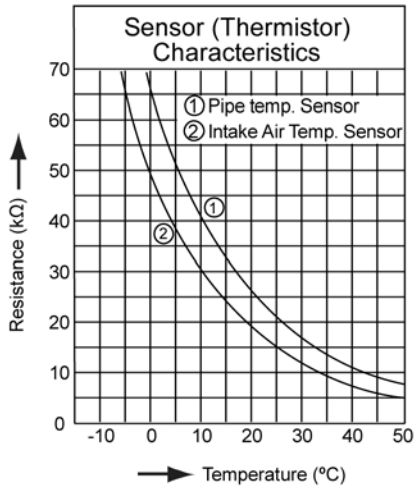

14.4.8 H25 (e-ion Air Purifying System Abnormal)

Malfunction Decision Conditions

- During standby of cooling and heating operation, e-ion breakdown occurs and air conditioner stops operation.

Malfunction Caused

- Faulty indoor main PCB.
- Faulty indoor e-ion power module.

Troubleshooting

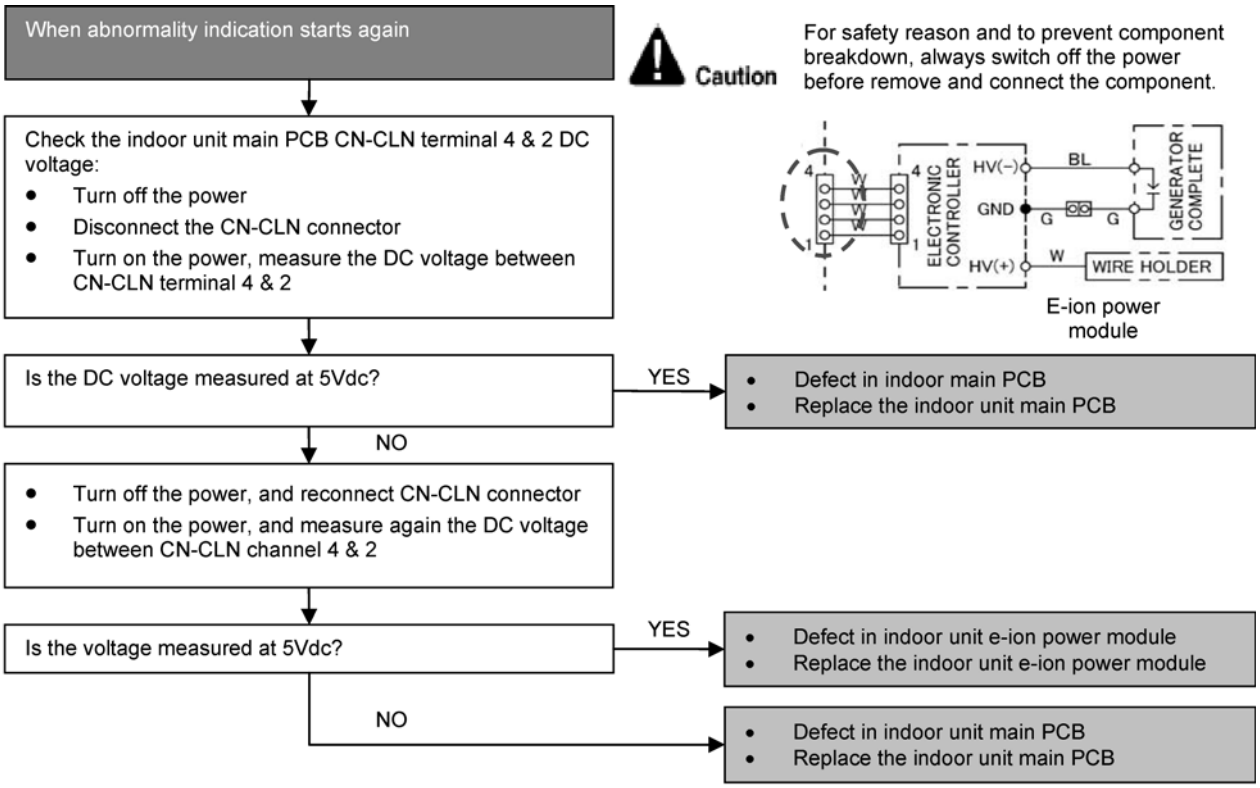

14.4.9 H27 (Outdoor Air Temperature Sensor Abnormality)

Malfunction Decision Conditions

- During startup and operation of cooling and heating, the temperatures detected by the outdoor air temperature sensor are used to determine sensor errors.

Malfunction Caused

- Faulty connector connection.
- Faulty sensor.
- Faulty PCB.

Troubleshooting

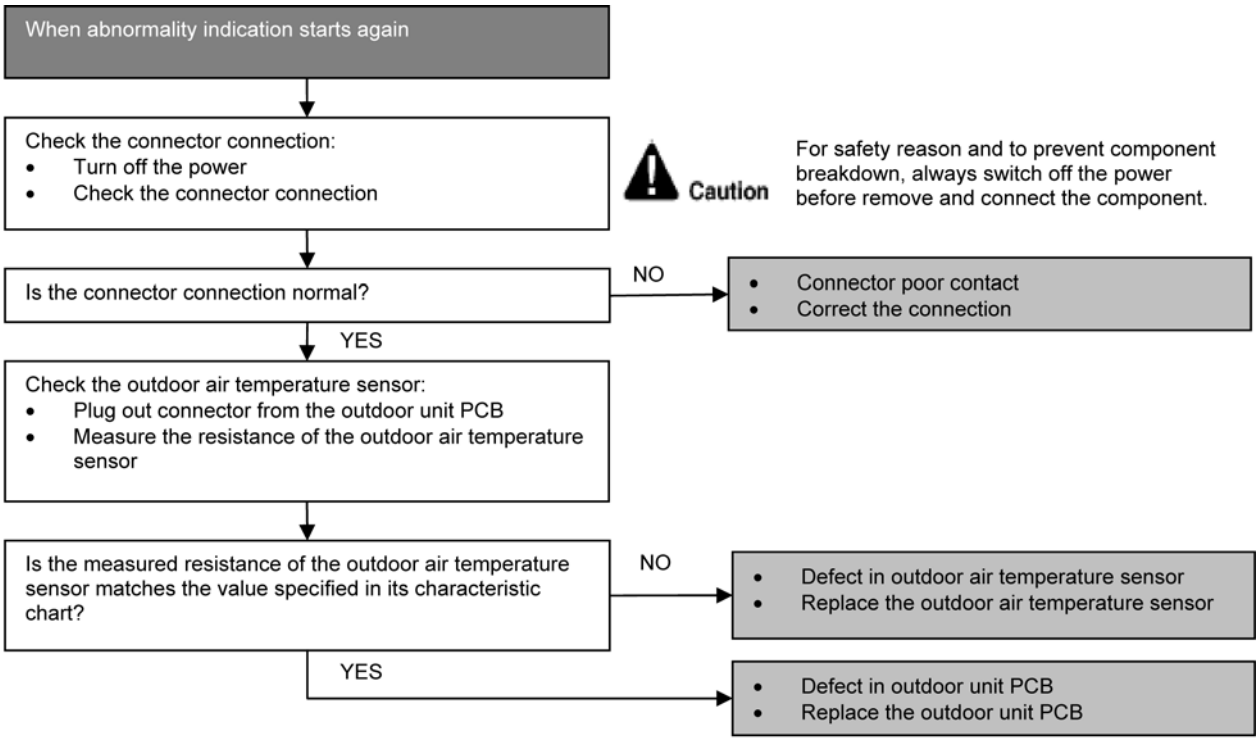

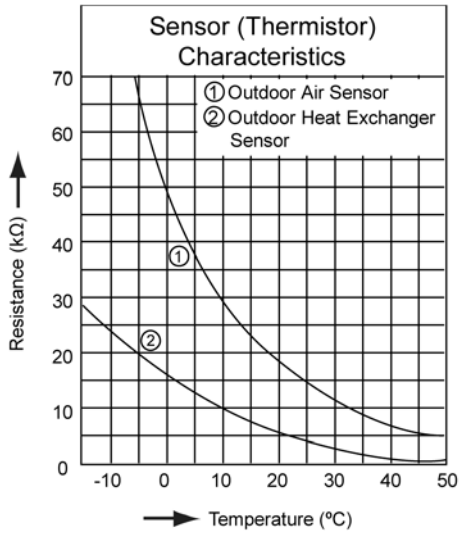

14.4.10 H28 (Outdoor Pipe Temperature Sensor Abnormality)

Malfunction Decision Conditions

- During startup and operation of cooling and heating, the temperatures detected by the outdoor pipe temperature sensor are used to determine sensor errors.

Malfunction Caused

- Faulty connector connection.
- Faulty sensor.
- Faulty PCB.

Troubleshooting

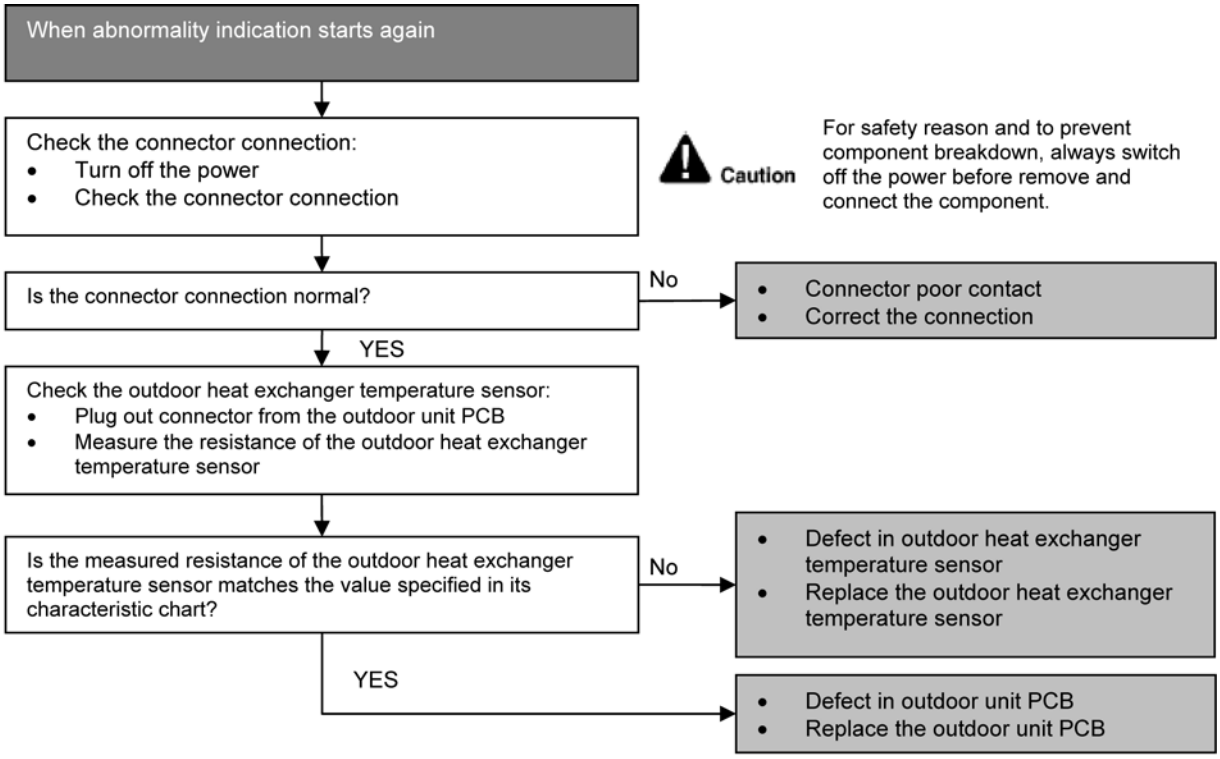

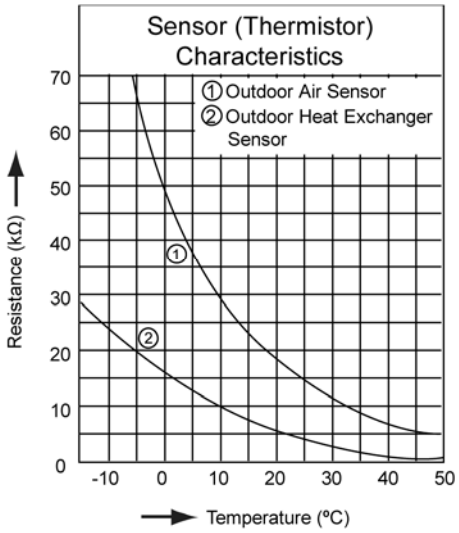

14.4.11 H30 (Compressor Discharge Temperature Sensor Abnormality)

Malfunction Decision Conditions

- During startup and operation of cooling and heating, the temperatures detected by the outdoor discharge pipe temperature sensor are used to determine sensor errors.

Malfunction Caused

- Faulty connector connection.
- Faulty sensor.
- Faulty PCB.

Troubleshooting

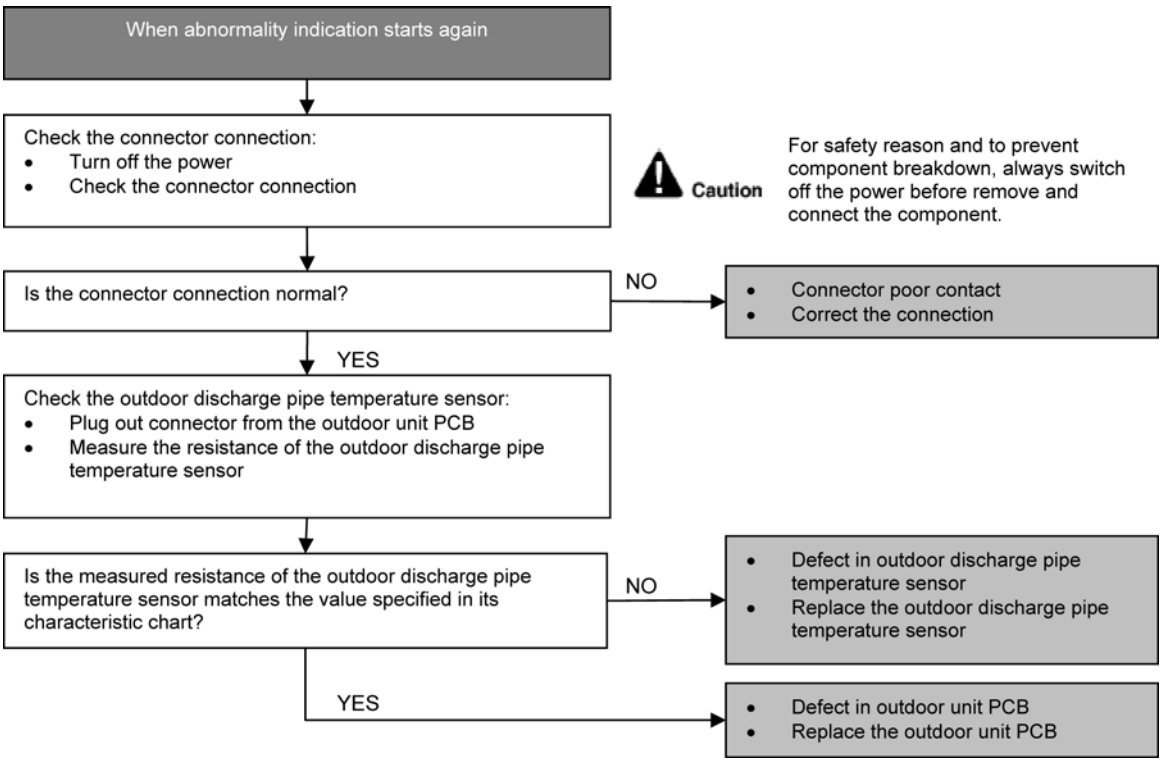

14.4.12 H33 (Unspecified Voltage between Indoor and Outdoor)

Malfunction Decision Conditions

- The supply power is detected for its requirement by the indoor/outdoor transmission.

Malfunction Caused

- Wrong models interconnected.
- Wrong indoor unit and outdoor unit PCBs used.
- Indoor unit or outdoor unit PCB defective.

Troubleshooting

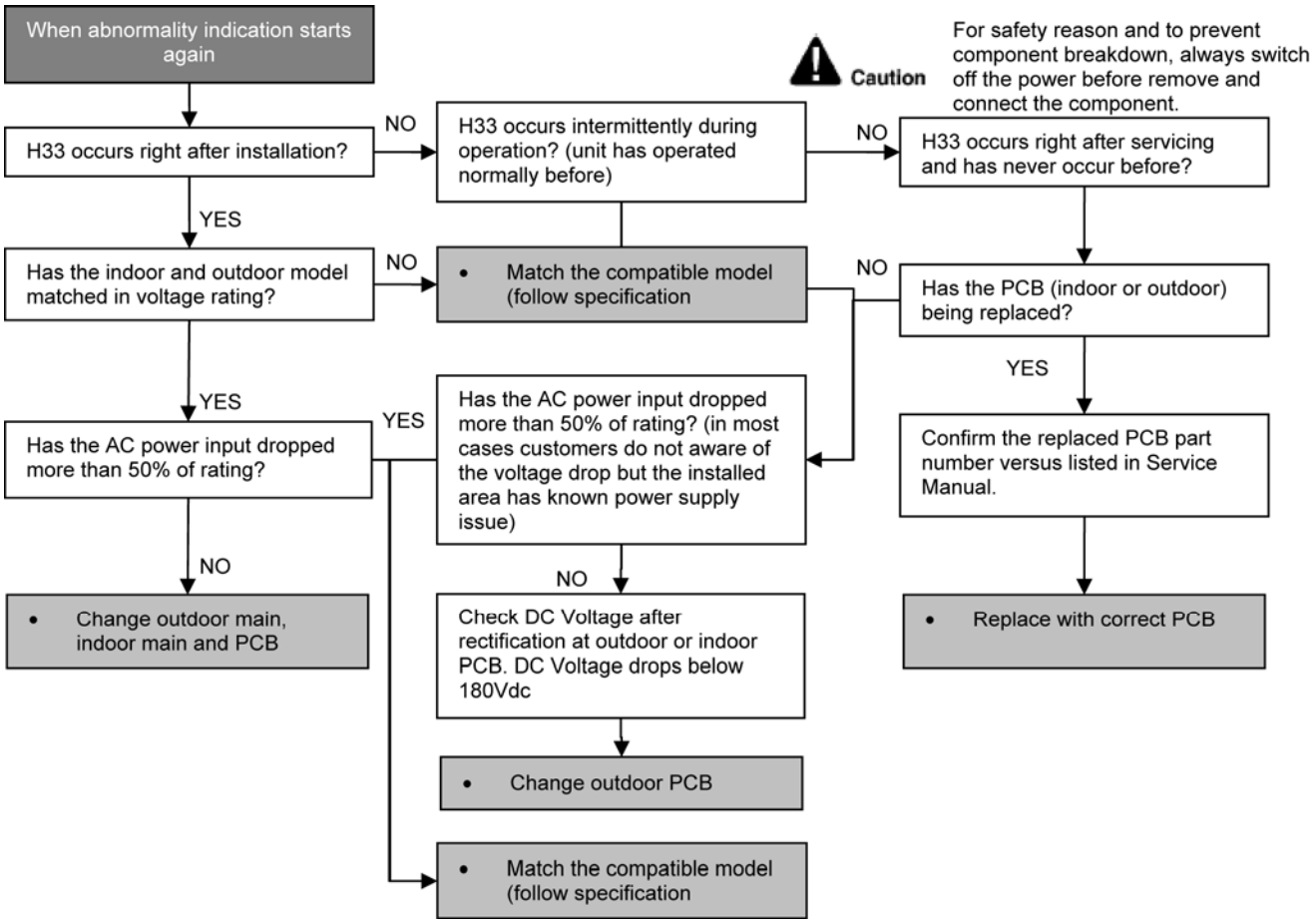

14.4.13 H58 (Patrol Sensor Abnormality)

Malfunction Decision Conditions

- If Patrol sensor feedback is 0V or 5V continuous for 6 hours.
- Error will display only when the Patrol operation is ON.

Malfunction Caused

- Faulty connector connection.
- Faulty Patrol sensor.

Troubleshooting

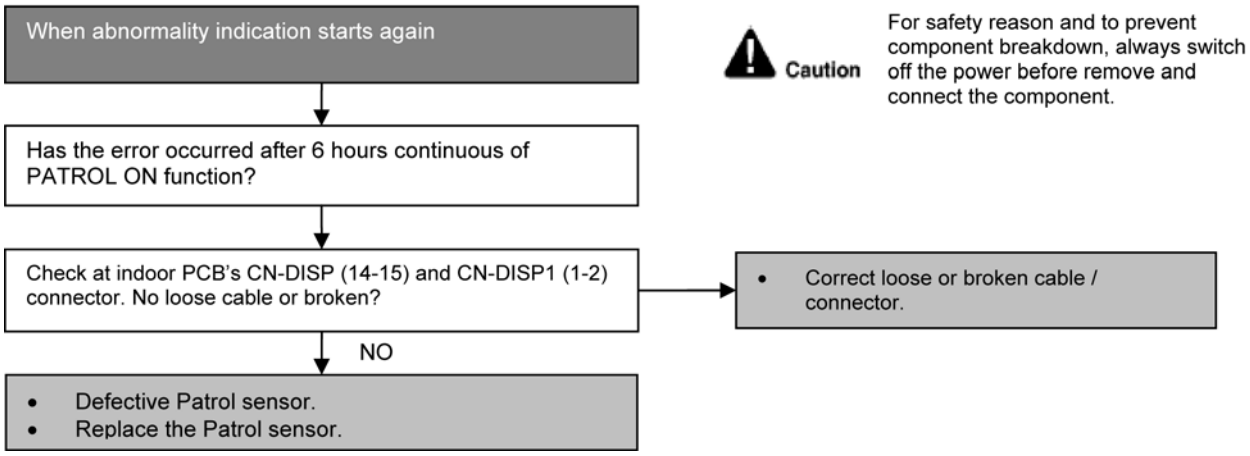

14.4.14 H97 (Outdoor Fan Motor – DC Motor Mechanism Locked)

Malfunction Decision Conditions

- The rotation speed detected by the Hall IC during fan motor operation is used to determine abnormal fan motor.

Malfunction Caused

- Operation stops due to short circuit inside the fan motor winding.
- Operation stops due to breaking of wire inside the fan motor.
- Operation stops due to breaking of fan motor lead wires.
- Operation stops due to Hall IC malfunction.
- Operation error due to faulty outdoor unit PCB.

Troubleshooting

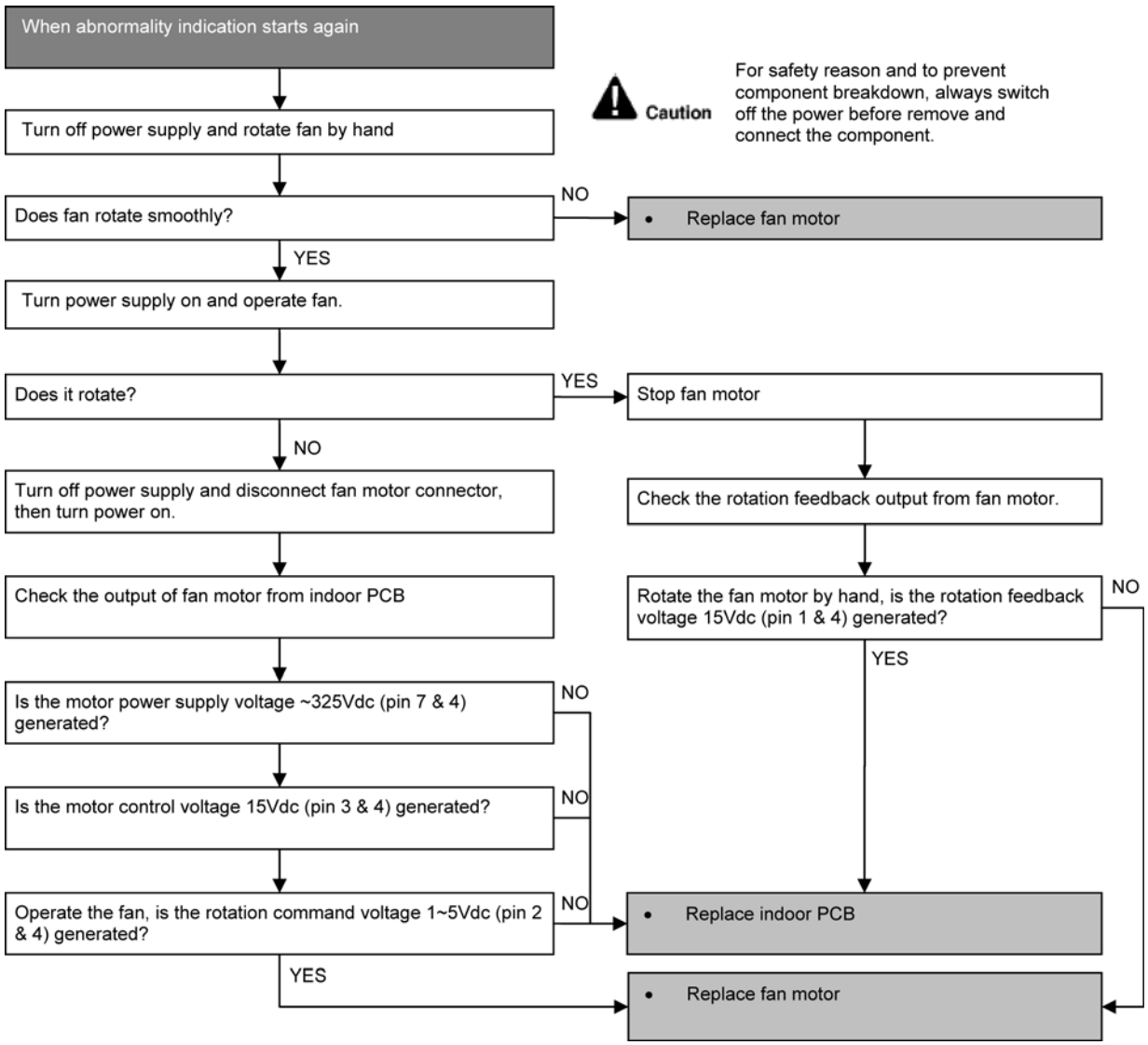

14.4.15 H98 (Indoor High Pressure Protection)

Error Code will not display (no Timer LED blinking) but store in EEPROM

Malfunction Decision Conditions

- During heating operation, the temperature detected by the indoor pipe temperature sensor is above 60°C.

Malfunction Caused

- Clogged air filter of the indoor unit
- Dust accumulation on the indoor unit heat exchanger
- Air short circuit
- Detection error due to faulty indoor pipe temperature sensor
- Detection error due to faulty indoor unit PCB

Troubleshooting

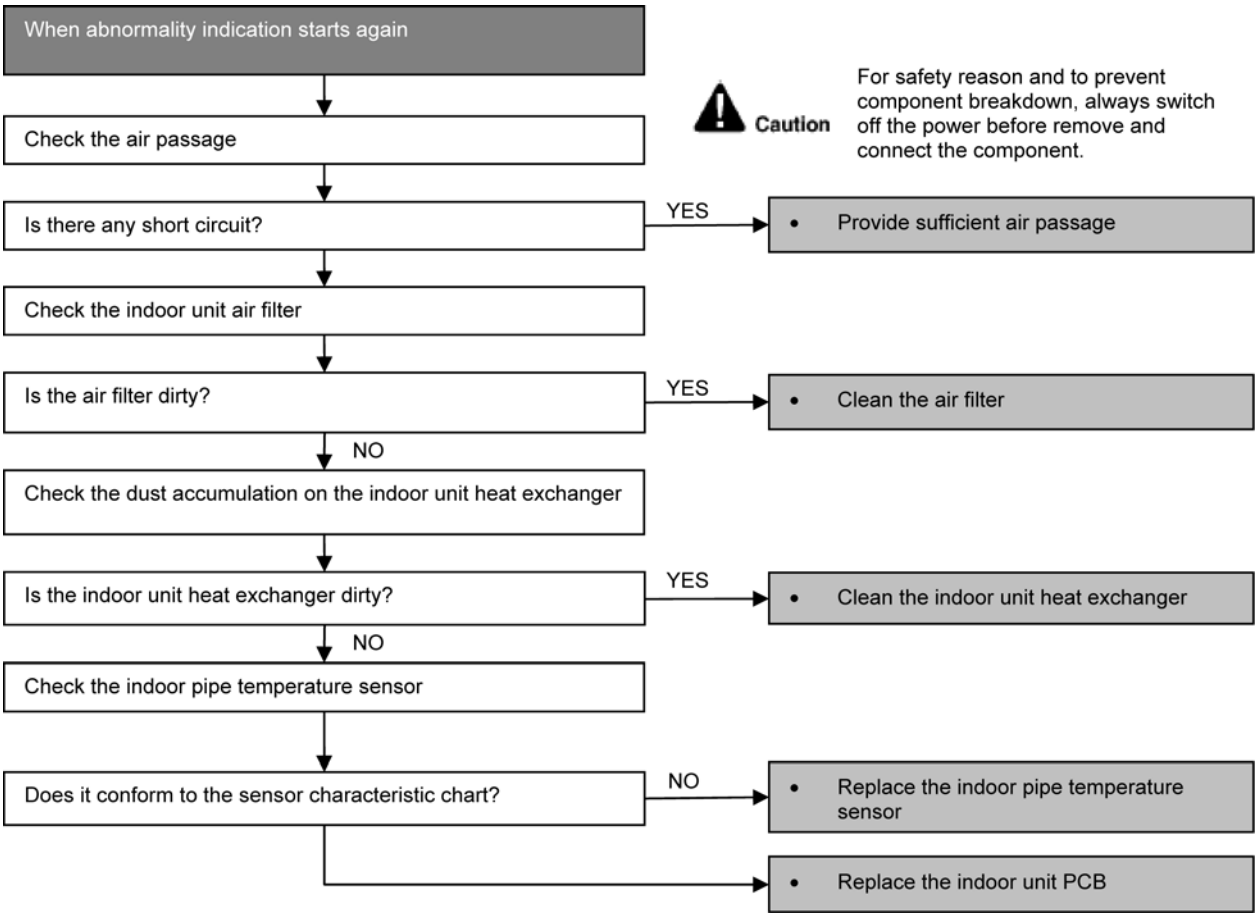

14.4.16 H99 (Indoor Freeze Prevention Protection: Cooling or Soft Dry)

Malfunction Decision Conditions

- Freeze prevention control takes place (when indoor pipe temperature is lower than 2°C)

Malfunction Caused

- Clogged air filter of the indoor unit
- Dust accumulation on the indoor unit heat exchanger
- Air short circuit
- Detection error due to faulty indoor pipe temperature sensor
- Detection error due to faulty indoor unit PCB

Troubleshooting

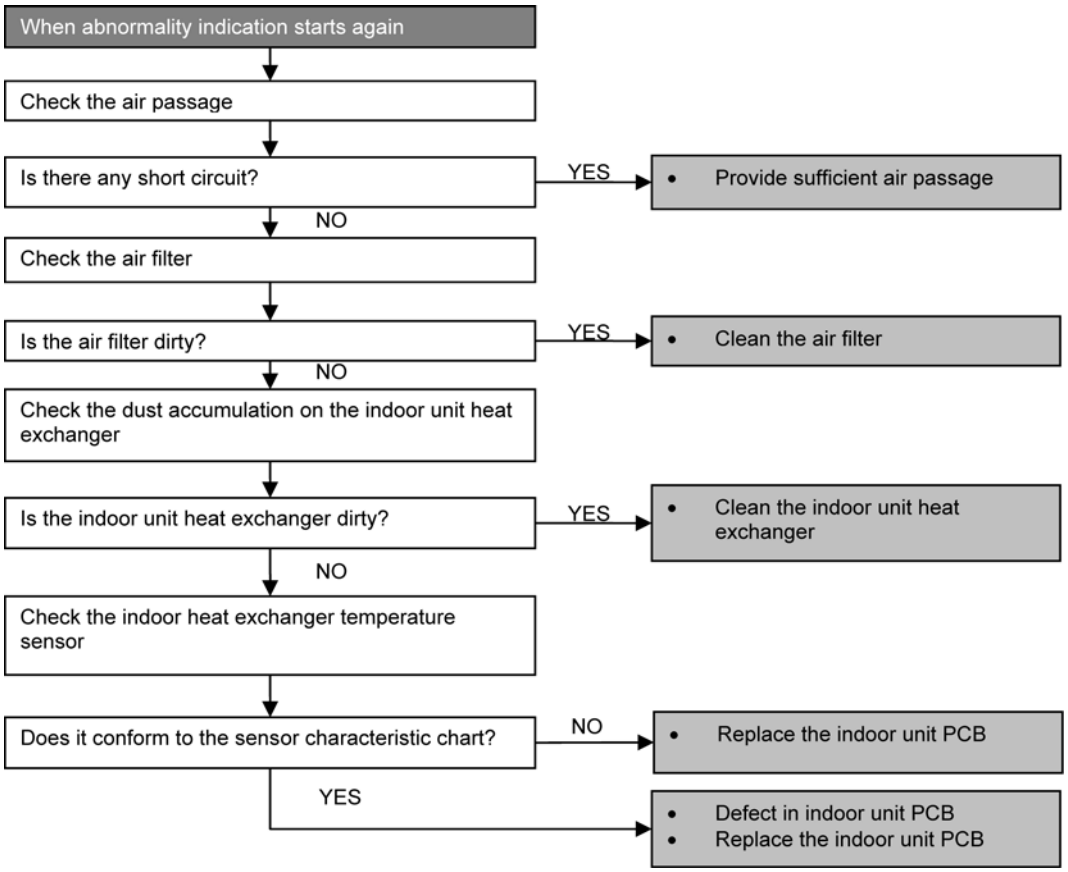

14.4.17 F11 (Indoor Pipe Temperature Sensor Abnormality)

Malfunction Decision Conditions

- When cooling operation, when indoor pipe temperature or indoor heat exchanger temperature sensor is above 45°C.

Malfunction Caused

- Faulty connector connection.
- Faulty indoor pipe temperature sensor.
- Faulty indoor main PCB.

Troubleshooting

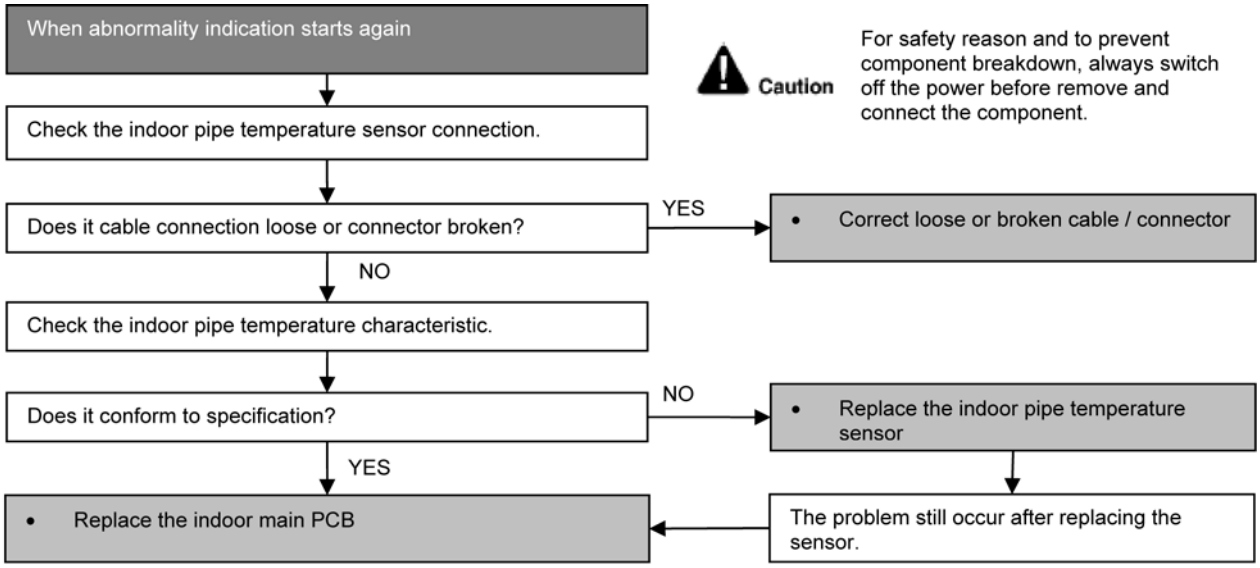

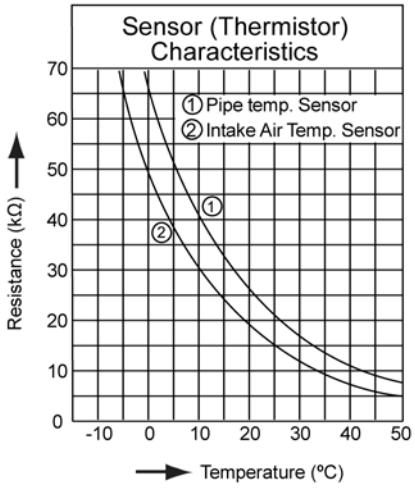

14.4.18 F90 (Power Factor Correction Protection)

Malfunction Decision Conditions

- During startup and operation of cooling and heating, when Power Factor Correction (PFC) protection circuitry at the outdoor unit main PCB senses abnormal high DC voltage level.

Malfunction Caused

- DC voltage peak due to power supply surge.
- DC voltage peak due to compressor windings not uniform.
- Faulty outdoor PCB.

Troubleshooting

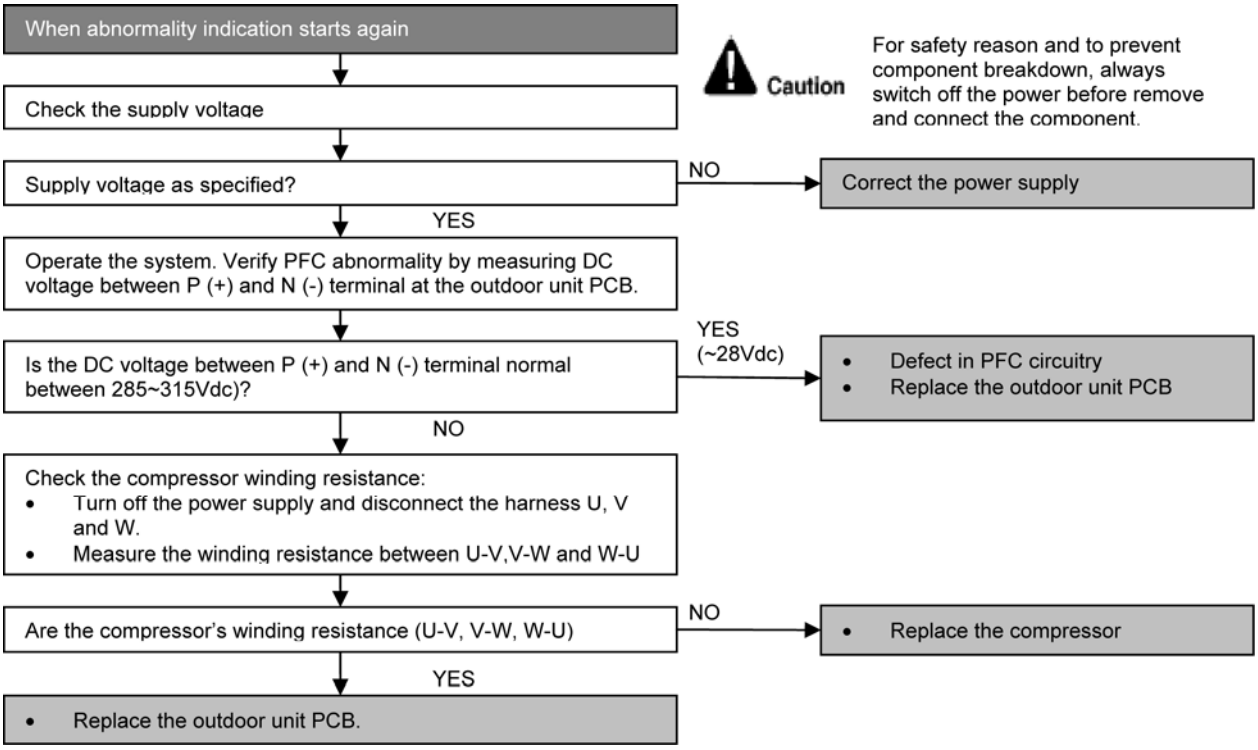

14.4.19 F91 (Refrigeration Cycle Abnormality)

Malfunction Decision Conditions

- During cooling, compressor frequency = Fcmax.
- During cooling and heating operation, running current: 0.65A < I < 1.65A.
- During cooling, indoor intake - indoor pipe < 4°C.

Malfunction Caused

- Refrigerant shortage (refrigerant leakage)
- Poor compression performance of compressor.
- 2/3 way valve closed.
- Detection error due to faulty indoor intake air or indoor pipe temperature sensors.

Troubleshooting

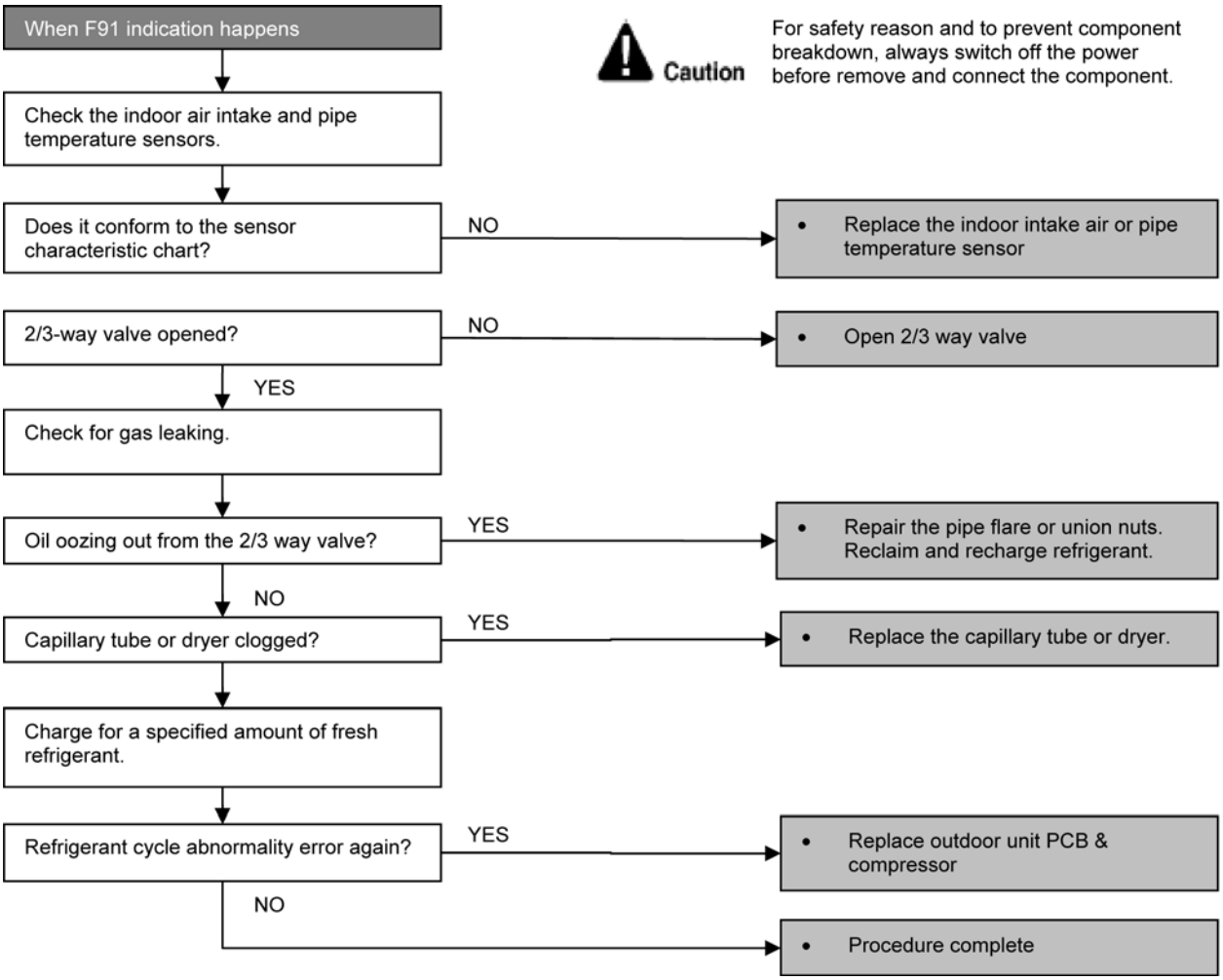

14.4.20 F93 (Compressor Rotation Failure)

Malfunction Decision Conditions

A compressor rotation failure is detected by checking the compressor running condition through the position detection circuit.

Malfunction Caused

- Compressor terminal disconnect
- Outdoor PCB malfunction

Troubleshooting

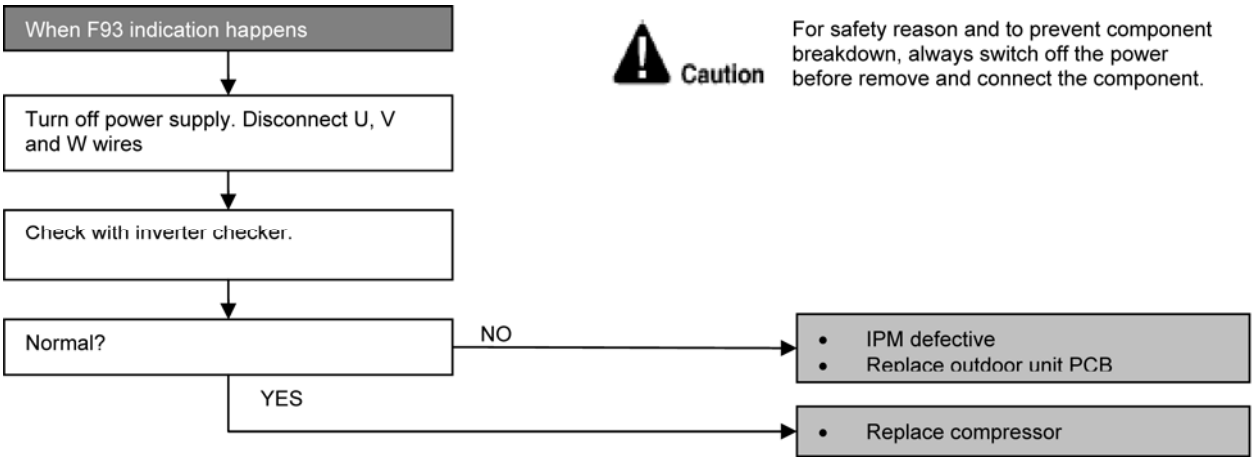

14.4.21 F95 (Cooling High Pressure Abnormality)

Malfunction Decision Conditions

During operation of cooling, when outdoor unit heat exchanger high temperature data (61°C) is detected by the outdoor pipe temperature sensor.

Malfunction Caused

- Outdoor pipe temperature rise due to short circuit of hot discharge air flow.
- Outdoor pipe temperature rise due to defective of outdoor fan motor.
- Outdoor pipe temperature rise due to defective outdoor pipe temperature sensor.
- Outdoor pipe temperature rise due to defective outdoor unit PCB.

Troubleshooting

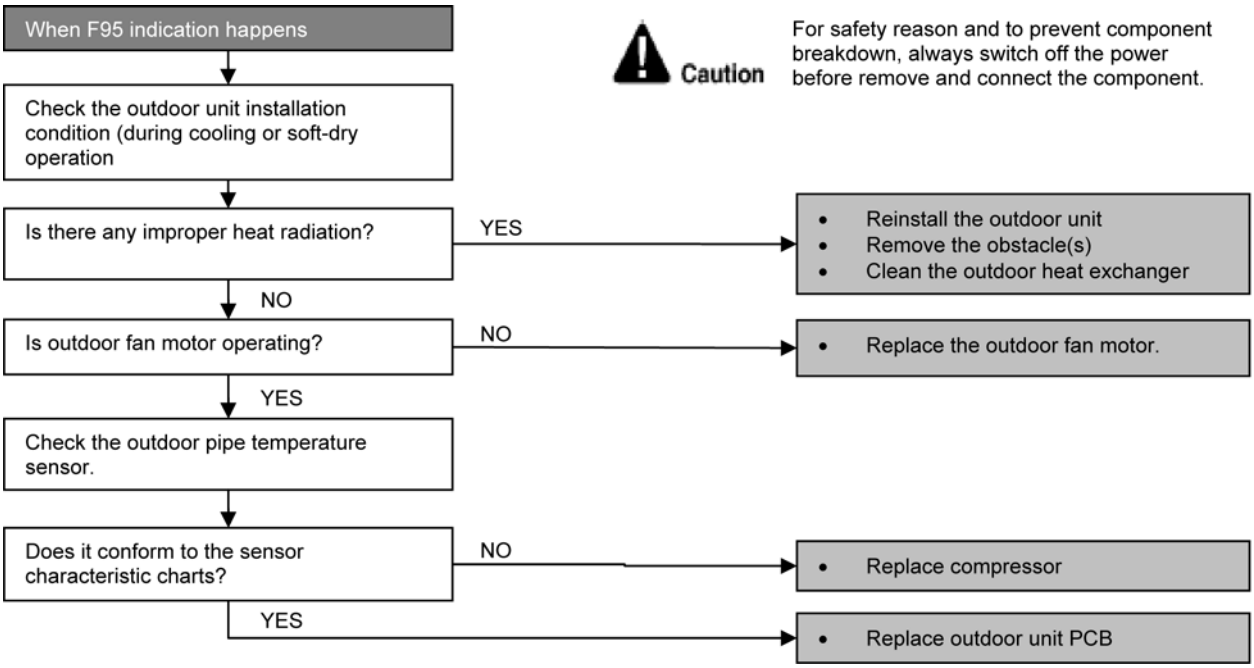

14.4.22 F96 (IPM Overheating)

Malfunction Decision Conditions

During operating of cooling and heating, when IPM temperature data (100°C) is detected by the IPM temperature sensor.

Malfunction Caused

- IPM overheats due to short circuit of hot discharge air flow.
- IPM overheats due to defective of outdoor fan motor.
- IPM overheats due to defective of internal circuitry of IPM.
- IPM overheats due to defective IPM temperature sensor.

Troubleshooting

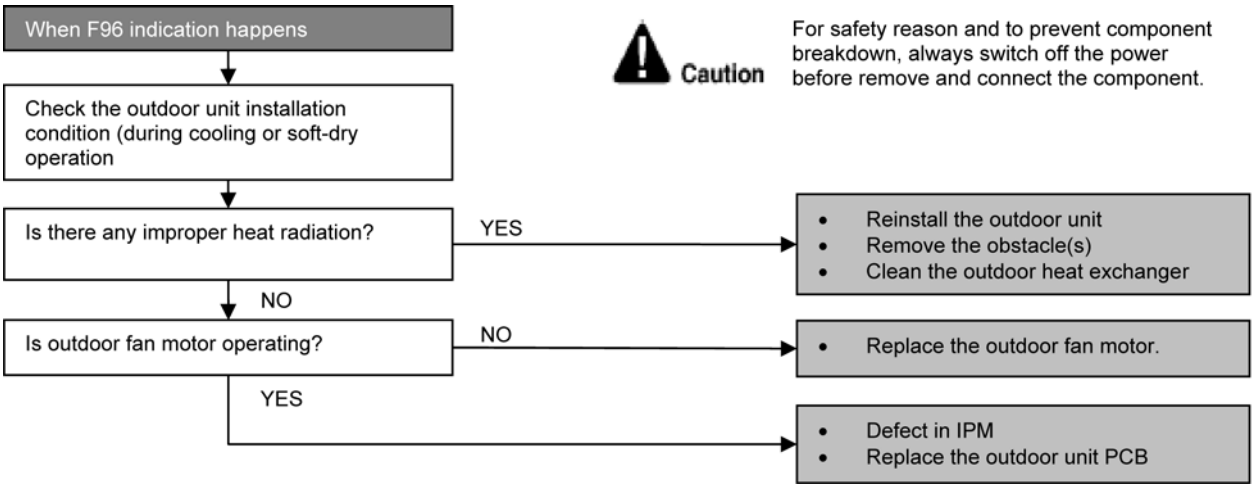

14.4.23 F97 (Compressor Overheating)

Malfunction Decision Conditions

During operation of cooling and heating, when compressor tank temperature data (112°C) is detected by the compressor tank temperature sensor.

Malfunction Caused

- Refrigerant shortage (refrigerant leakage).
- 2/3 way valve closed.
- Detection error due to faulty compressor tank temperature sensor.

Troubleshooting

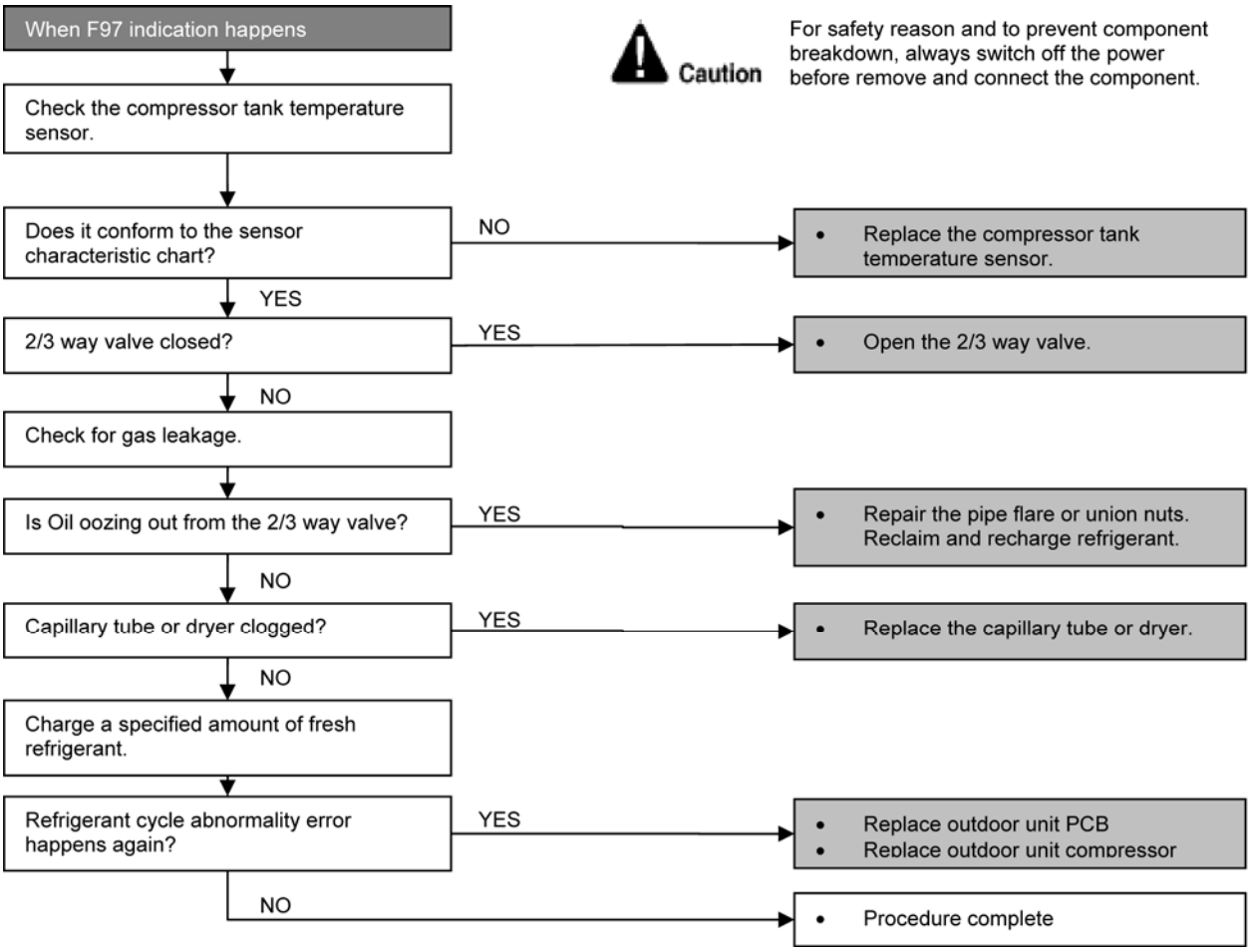

14.4.24 F98 (Input Over Current Detection)

Malfunction Decision Conditions

During cooling and heating operation, when an input over-current (16.8A) is detected by checking the input current value being detected by current transformer (CT) with the compressor running.

Malfunction Caused

- Over-current due to compressor failure.
- Over-current due to defective outdoor unit PCB.
- Over-current due to defective inverter main circuit electrolytic capacitor.
- Over-current due to excessive refrigerant.

Troubleshooting

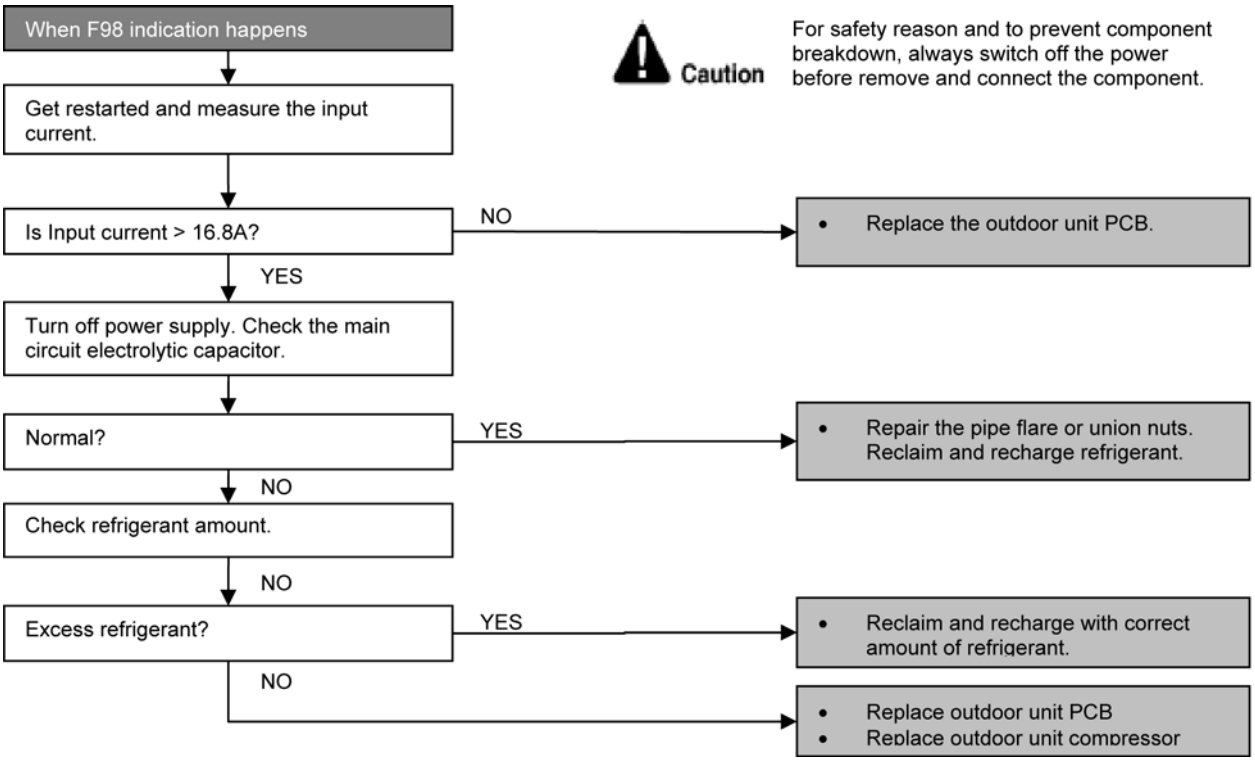

14.4.25 F99 (Output Over Current Detection)

Malfunction Decision Conditions

During operation of cooling and heating, when an output over-current (18.5A) is detected by checking the current that flows in the inverter DC peak sensing circuitry.

Malfunction Caused

- DC peak due to compressor failure.
- DC peak due to defective power transistor(s).
- DC peak due to defective outdoor unit PCB.

Troubleshooting

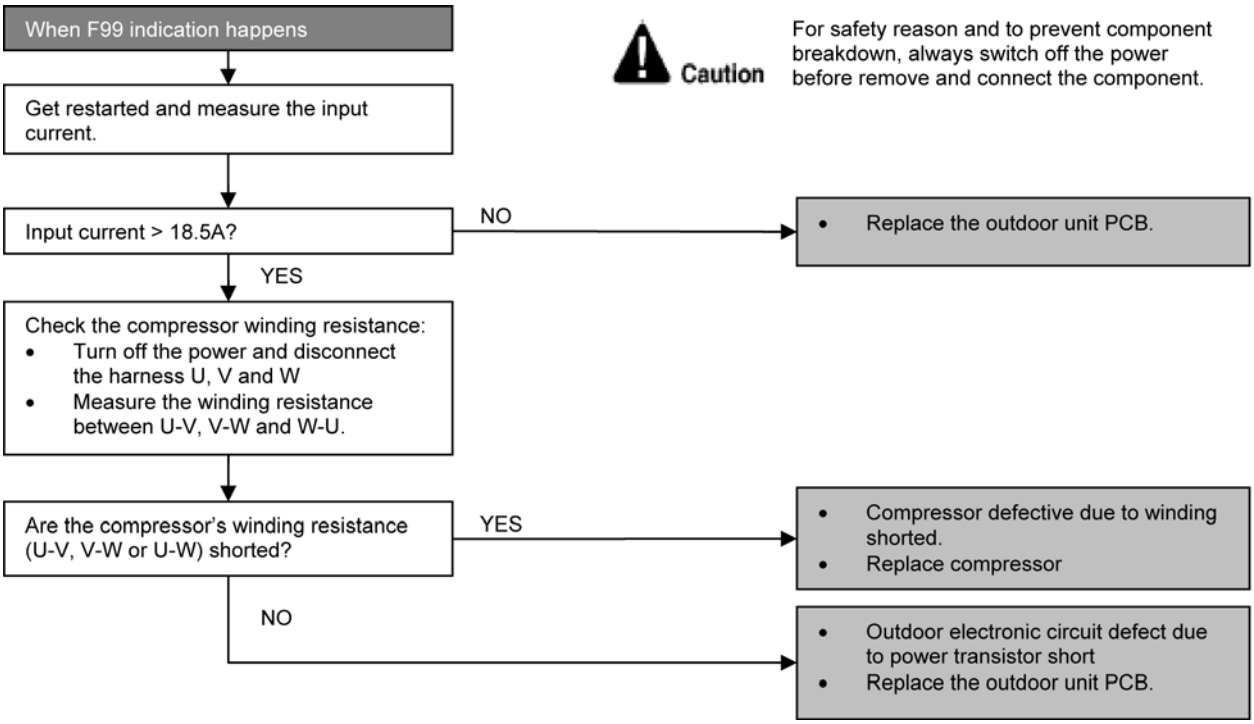

- Checking the power transistor
- Never touch any live parts for at least 10 minutes after turning off the circuit breaker.
- If unavoidable necessary to touch a live part, make sure the power transistor's supply voltage is below 50V using the tester.
- For the UVW, make measurement at the Faston terminal on the board of the relay connector.

Tester's negative terminal	Power transistor (+)	UVW	Power transistor (-)	UVW
Tester's positive terminal	UVW	Power transistor (+)	UVW	Power transistor (-)
Normal resistance	Several kΩ to several MΩ			
Abnormal resistance	0 or ∞			

15 Disassembly and Assembly Instructions

WARNING

High Voltage is generated in the electrical parts area by the capacitor. Ensure that the capacitor has discharged sufficiently before proceeding with repair work. Failure to heed this caution may result in electric shocks.

15.1 CS-S9KK CS-S12KK

15.1.1 Indoor Electronic Controllers, Cross Flow Fan and Indoor Fan Motor Removal Procedures

15.1.1.1 To remove front grille

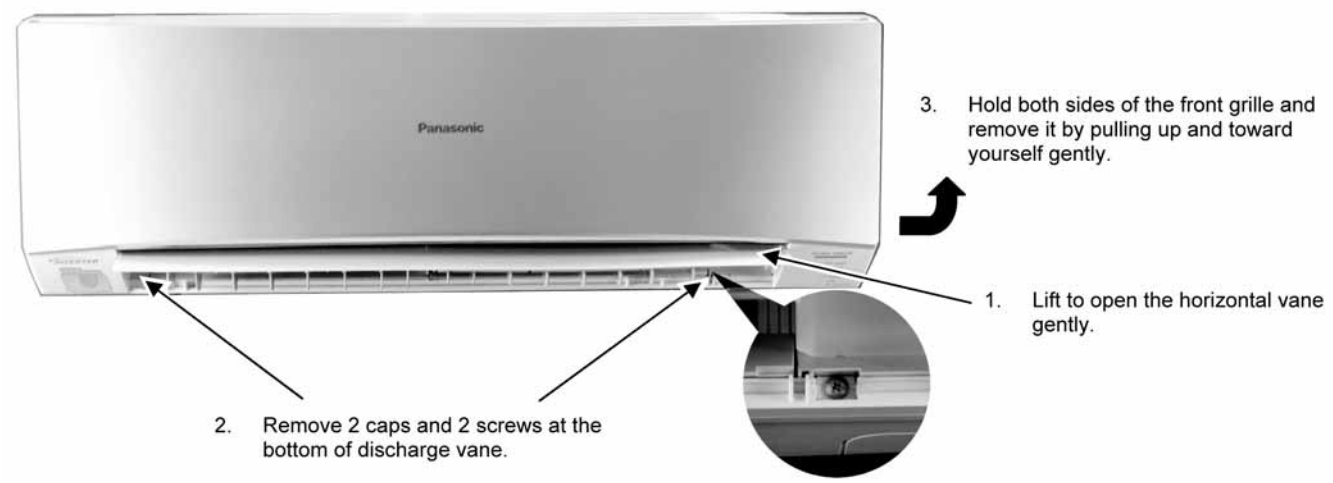

Figure 1

15.1.1.2 To remove power electronic controller

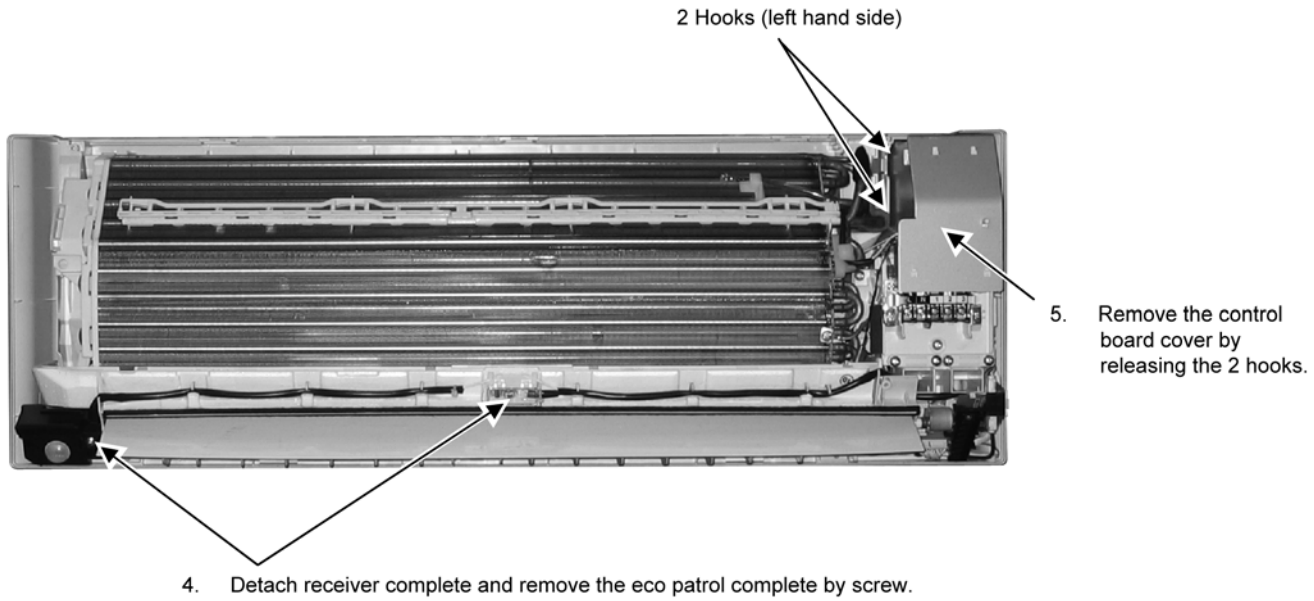

Figure 2

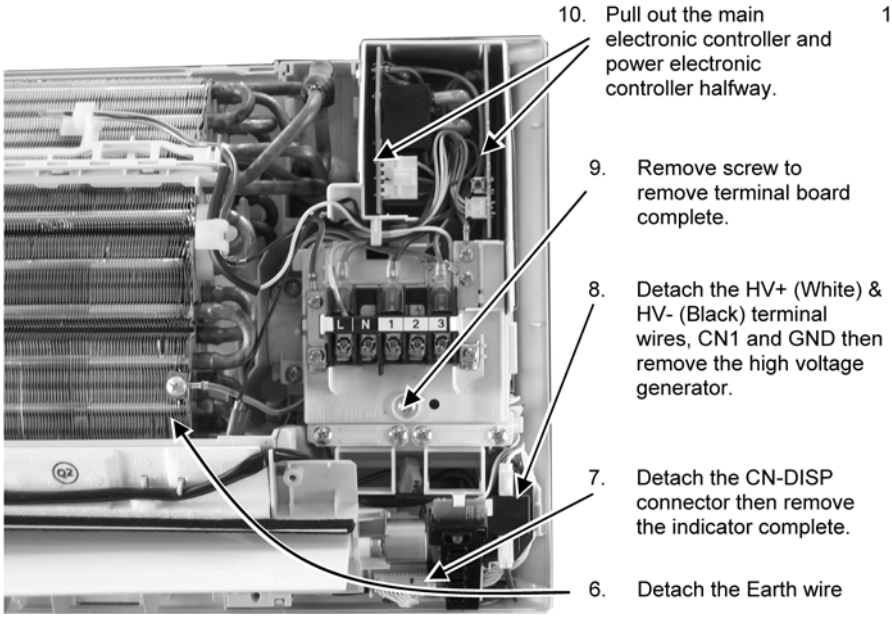

Figure 3

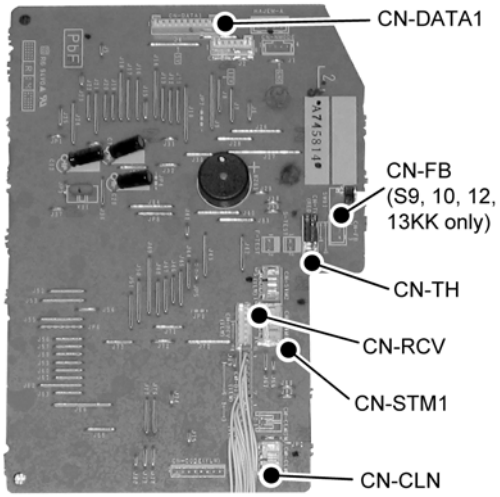

Figure 4

Figure 5

15.1.1.3 To remove discharge grille

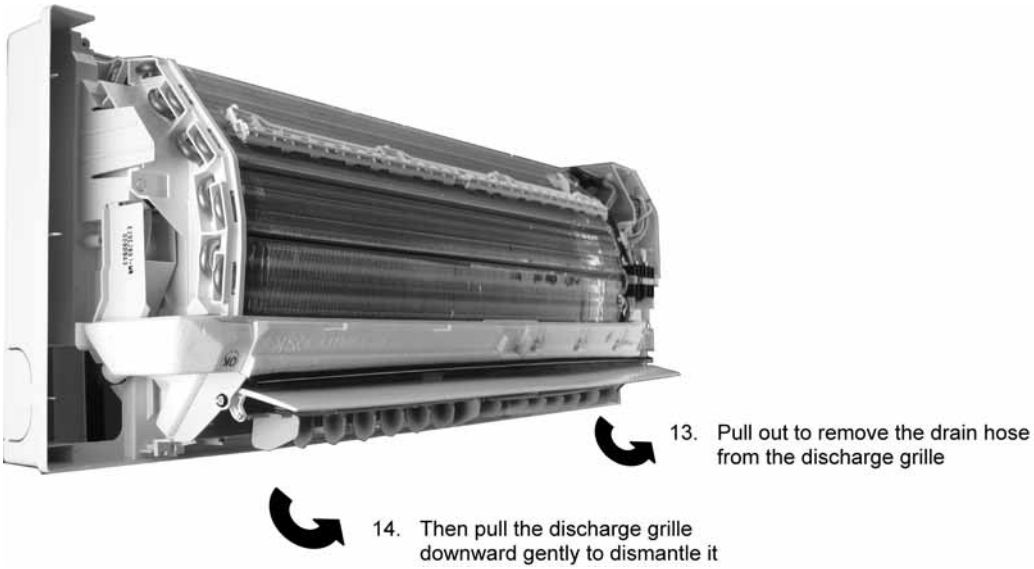

Figure 6

15.1.1.4 To remove control board

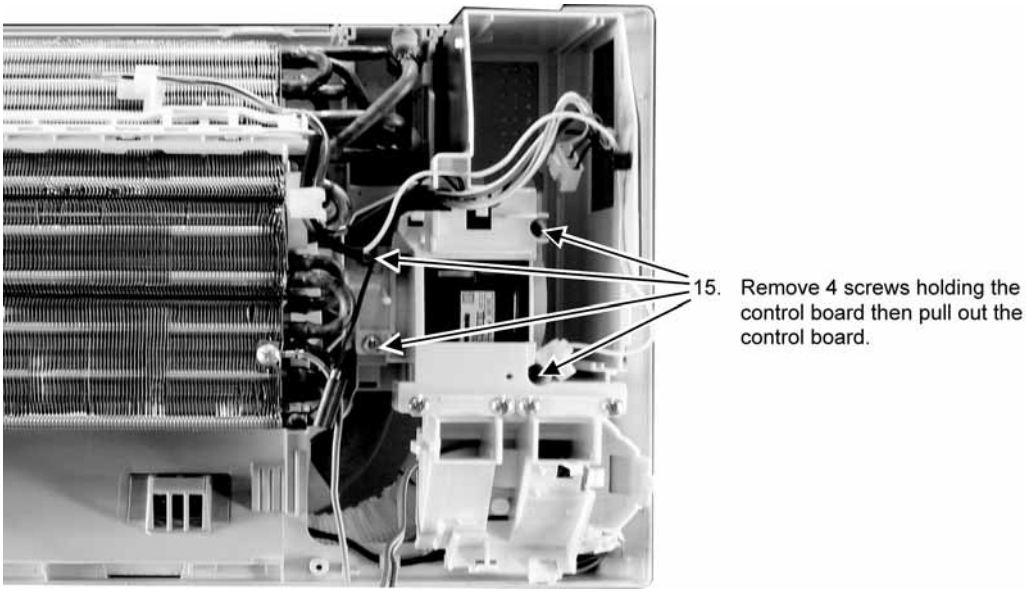

Figure 7

15.1.1.5 To remove cross flow fan and indoor fan motor

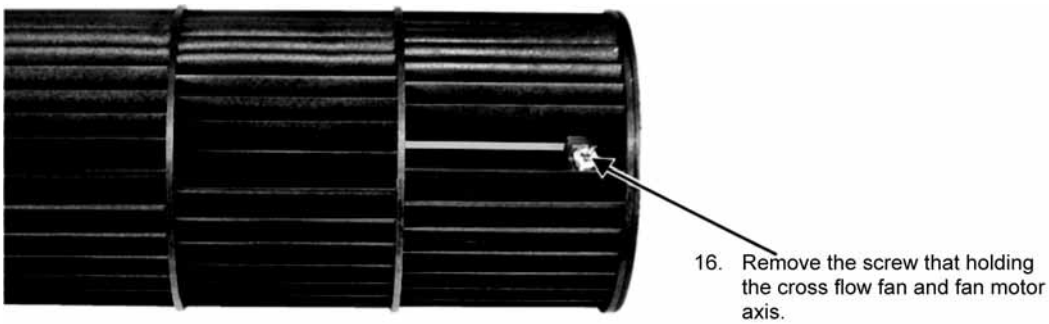

Figure 8

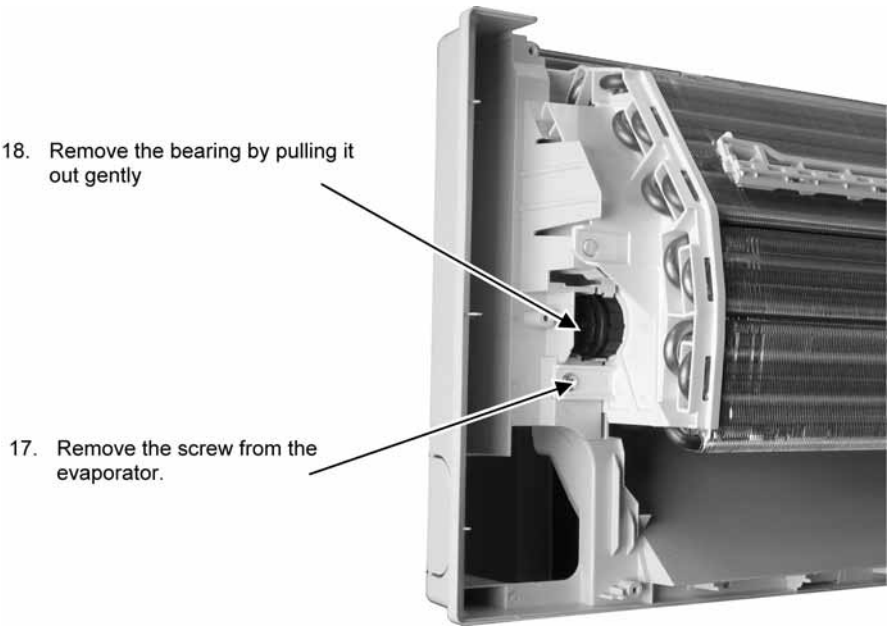

Figure 9

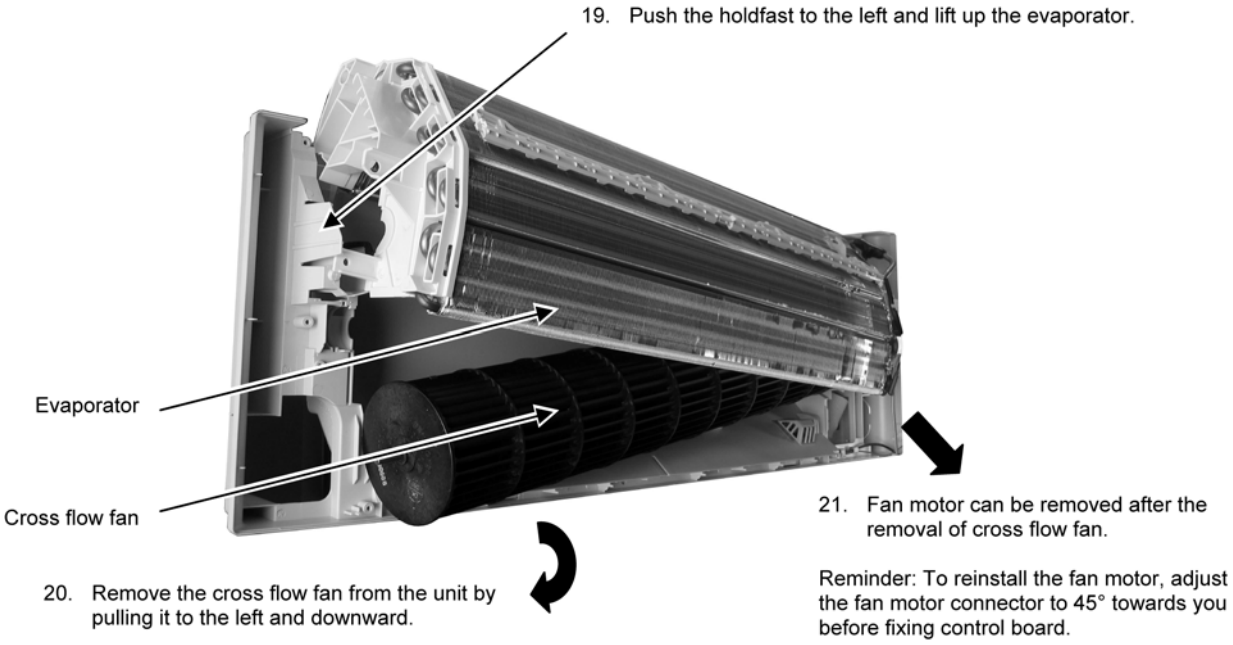

Figure 10

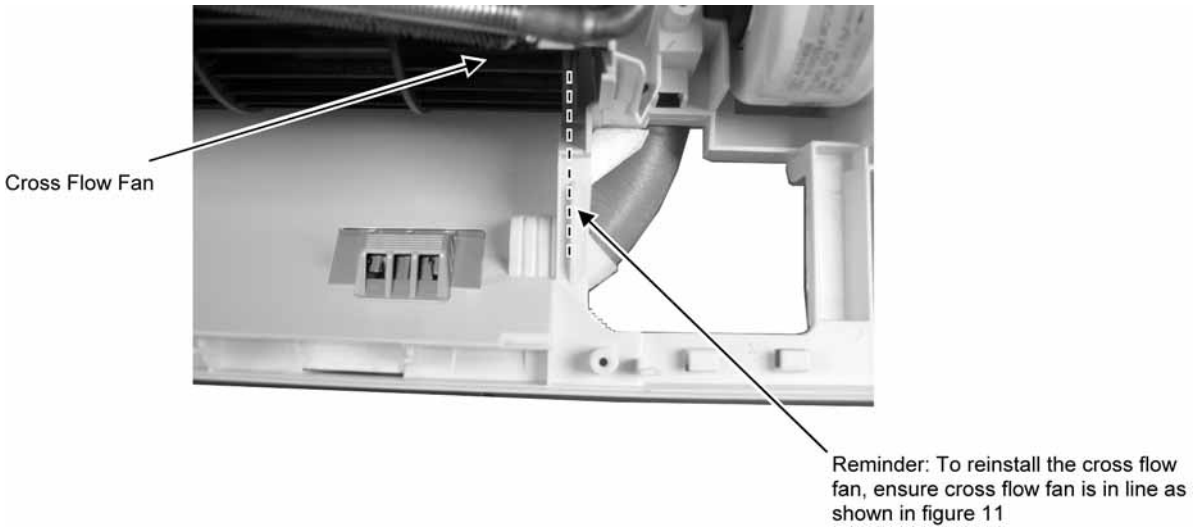

Figure 11

WARNING

High Voltage is generated in the electrical parts area by the capacitor. Ensure that the capacitor has discharged sufficiently before proceeding with repair work. Failure to heed this caution may result in electric shocks.

15.2 CS-S18KK CS-S24KK

15.2.1 Indoor Electronic Controllers, Cross Flow Fan and Indoor Fan Motor Removal Procedures

15.2.1.1 To remove front grille

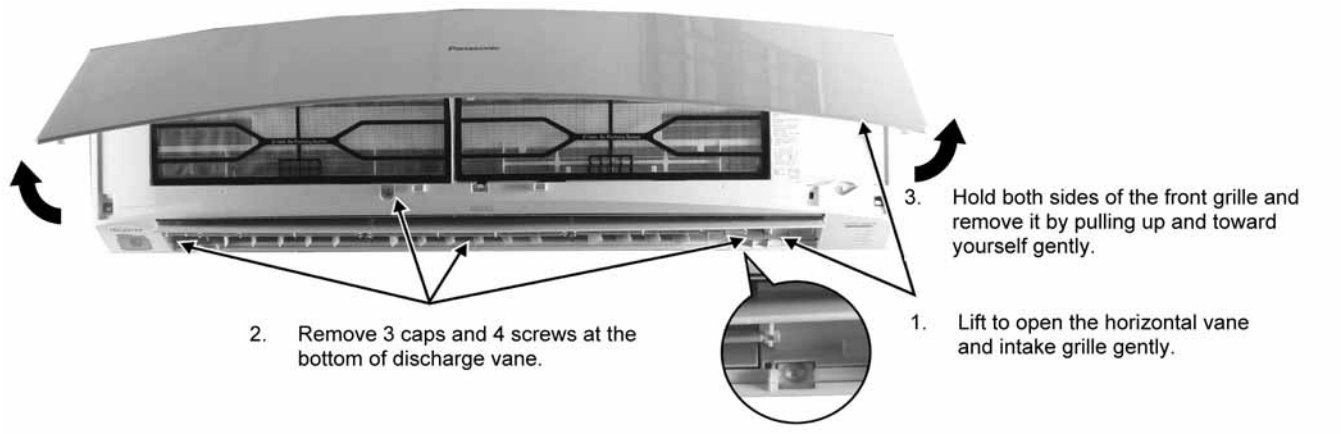

Figure 12

15.2.1.2 To remove horizontal vane

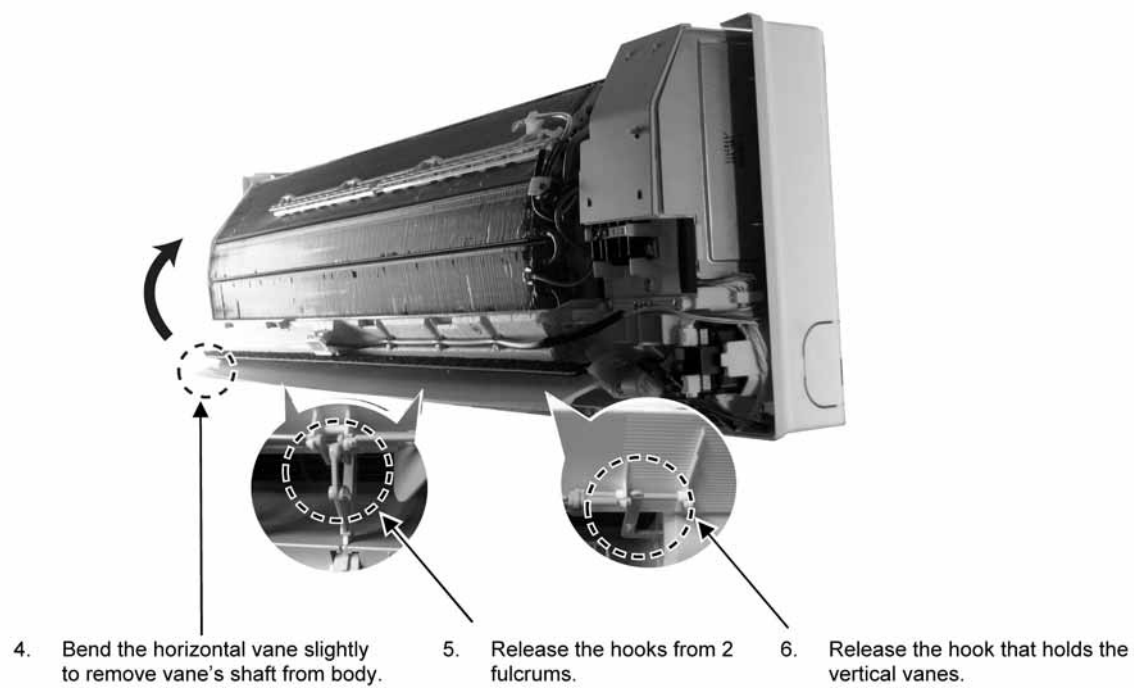

Figure 13

15.2.1.3 To remove power electronic controller

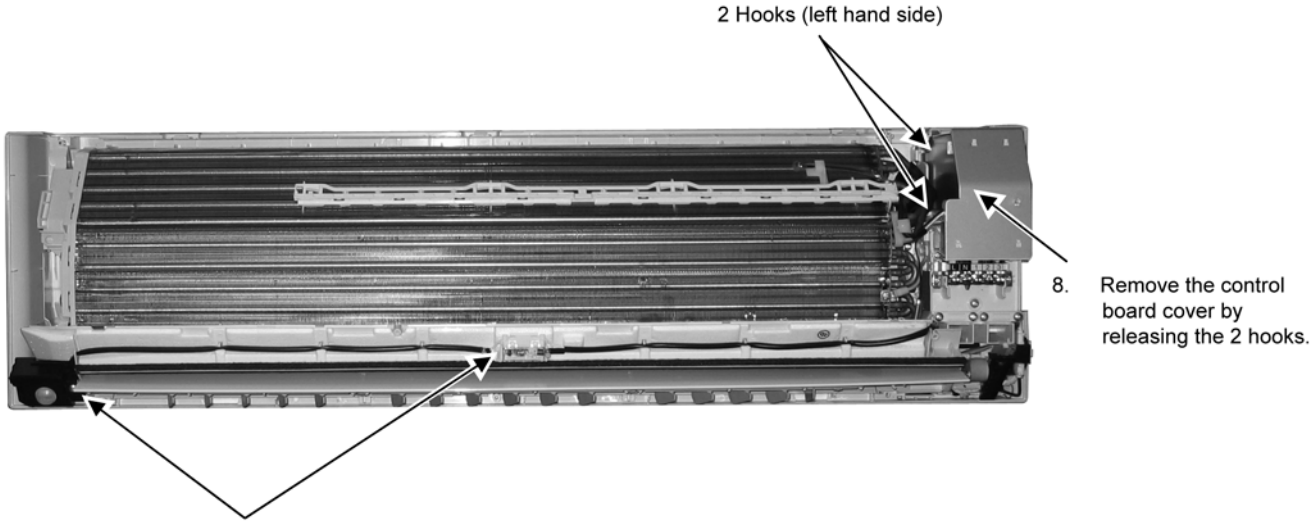

Figure 14

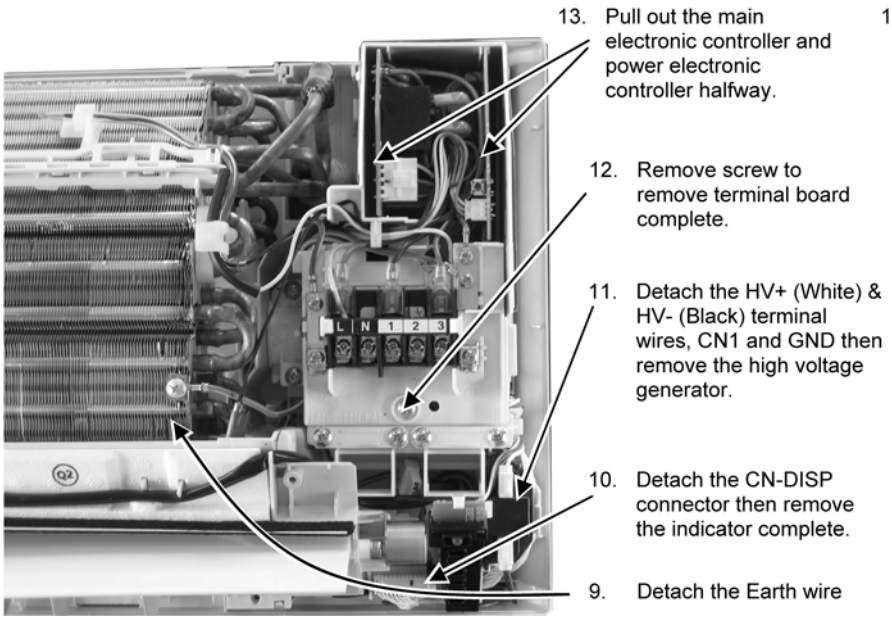

Figure 15

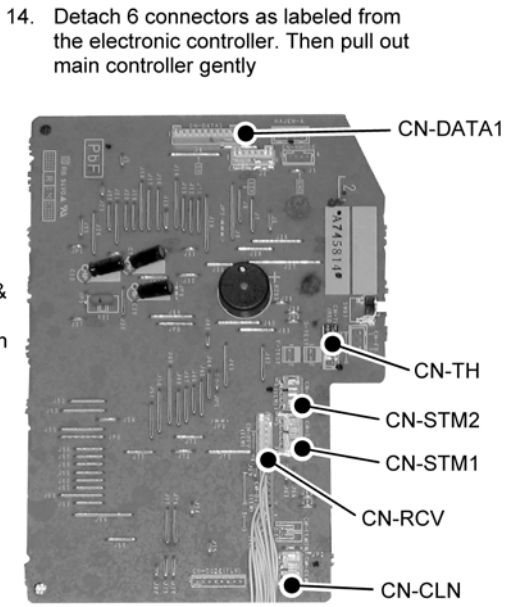

Figure 16

Figure 17

15.2.1.4 To remove discharge grille

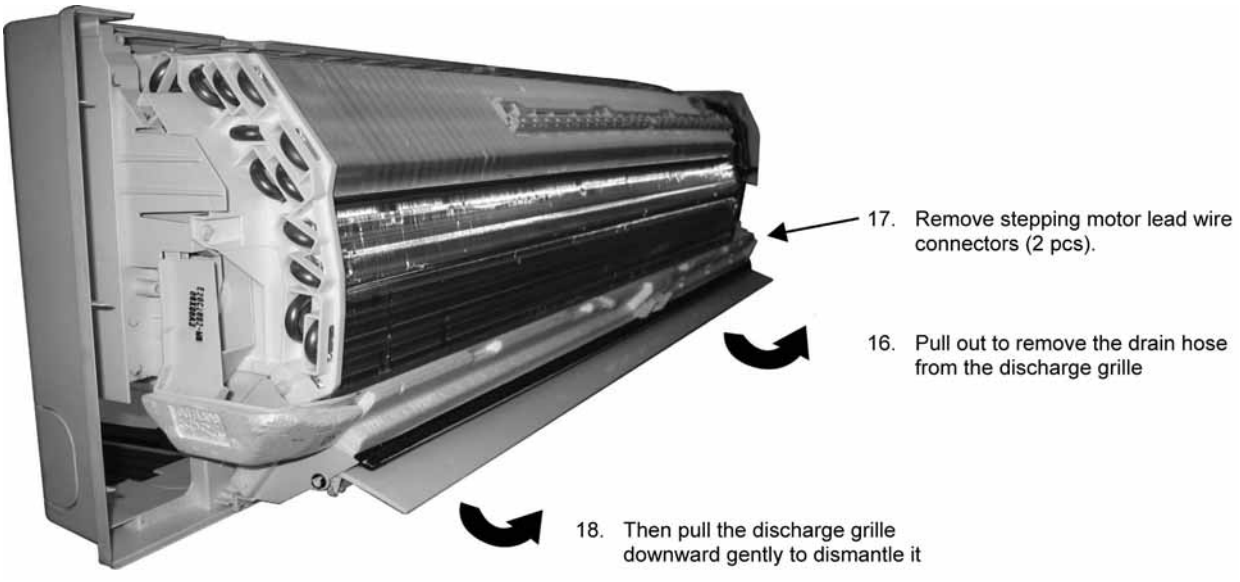

Figure 18

15.2.1.5 To remove control board

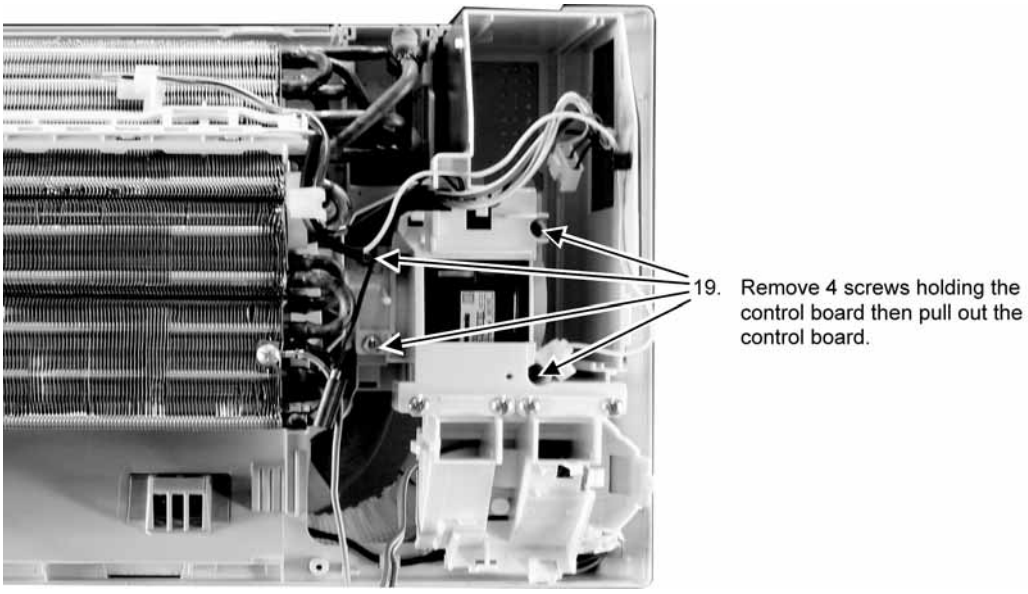

Figure 19

15.2.1.6 To remove cross flow fan and indoor fan motor

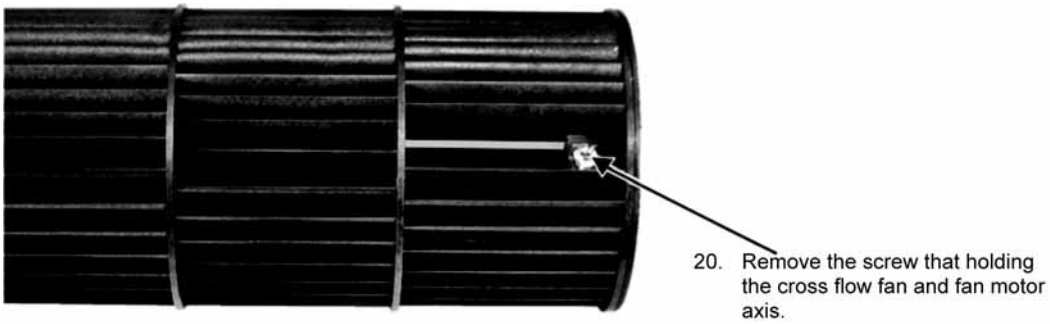

Figure 20

Figure 21

23. Push the holdfast to the left and lift up the evaporator.

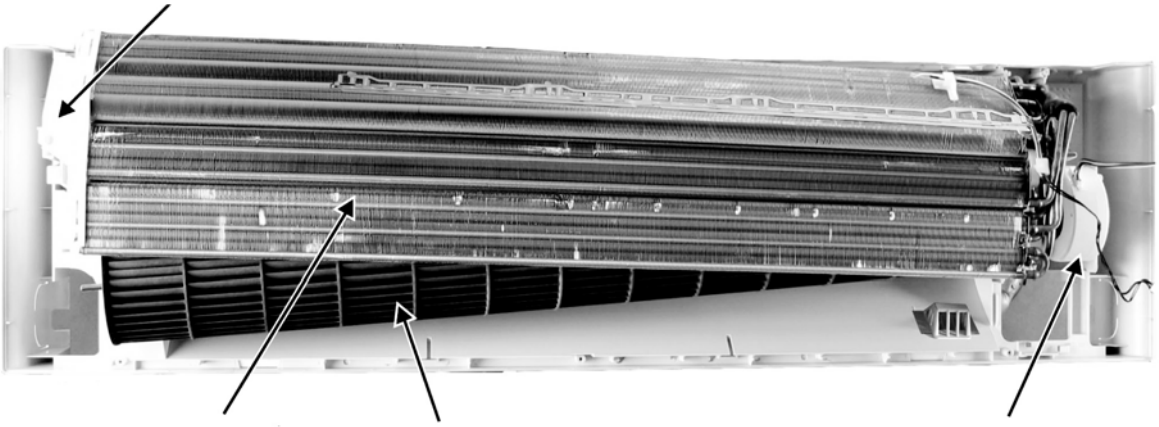

24. Remove the cross flow fan from the unit by pulling it to the left and downward.

25. Fan motor can be removed after the removal of cross flow fan.

Reminder: To reinstall the fan motor, adjust the fan motor connector to 45° towards you before fixing control board.

Figure 22

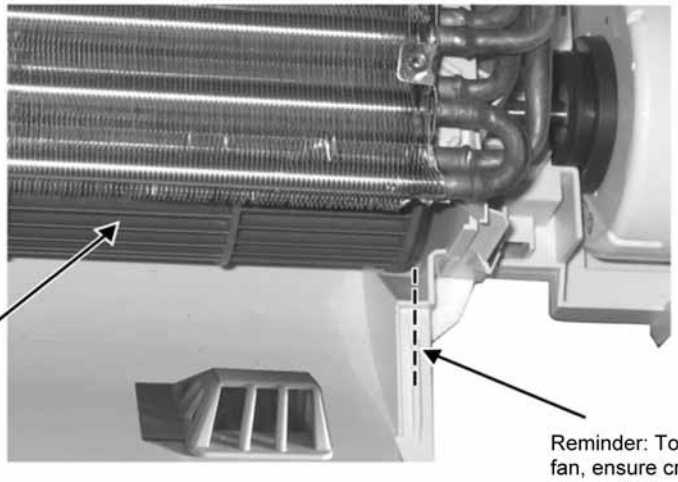

Reminder: To reinstall the cross flow fan, ensure cross flow fan is in line as shown in figure 23.

Figure 23

16 Technical Data

16.1 Operation Characteristics

16.1.1 CS-S9KK CU-S9KK

- Cooling Characteristic
  - Room temperature: 27°C (DBT), 19°C (WBT)
  - Operation condition: High fan speed
  - Piping length: 7.5m
  - Compressor Frequency = Fc

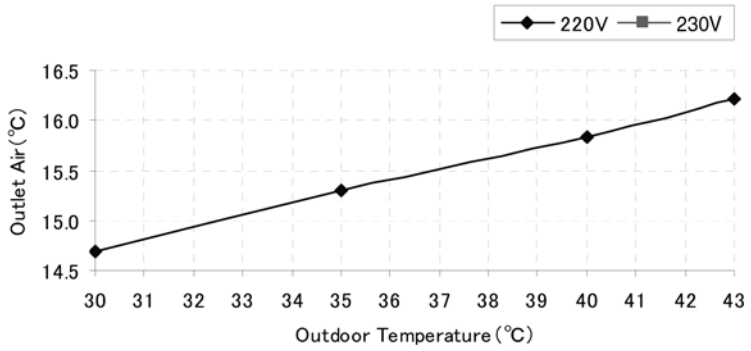

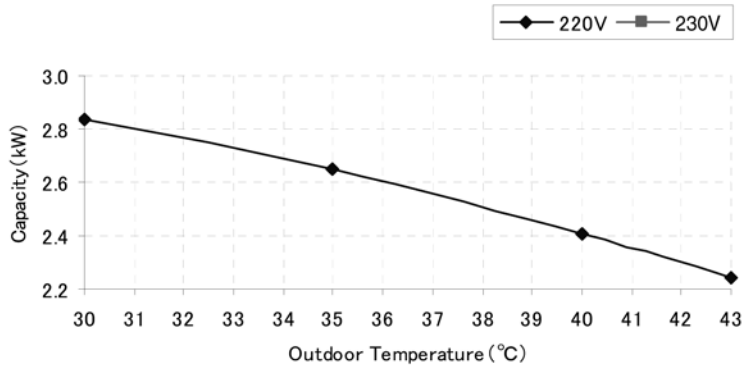

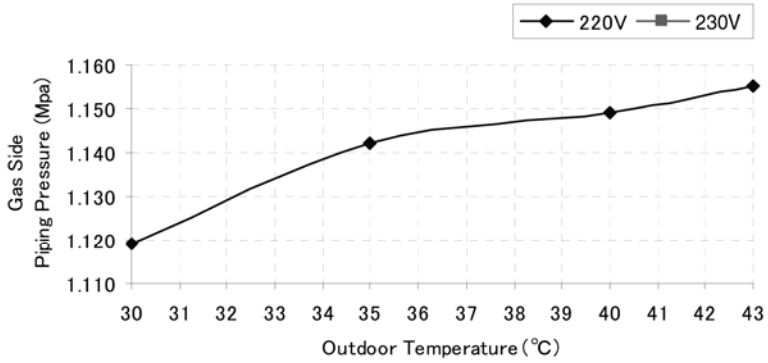

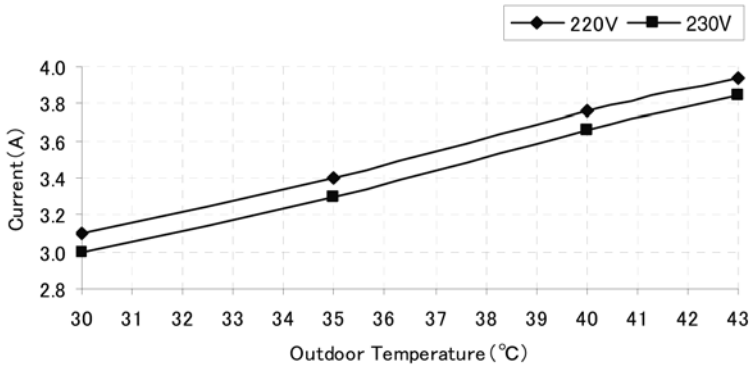

- Piping Length Characteristic
  - Room temperature: 27°C (DBT), 19°C (WBT)
  - Operation condition: High fan speed
  - Outdoor temperature: 35°C (DBT), 24°C (WBT)
  - Compressor Frequency = Fc

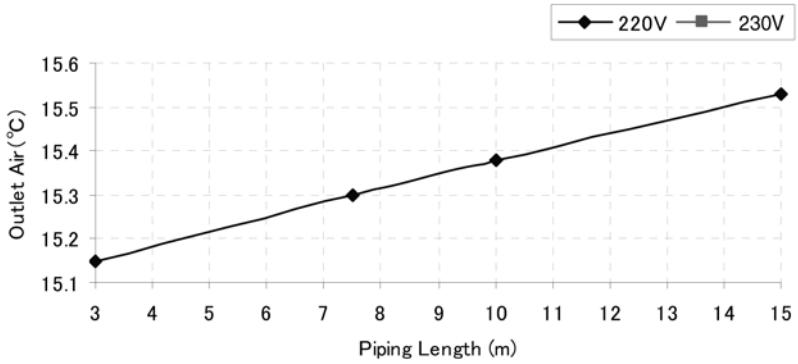

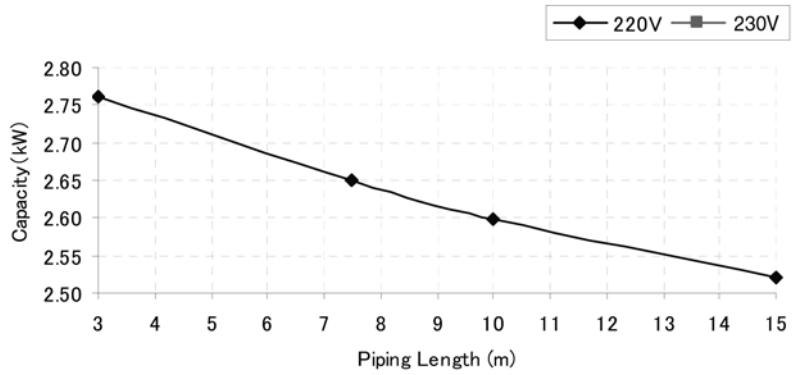

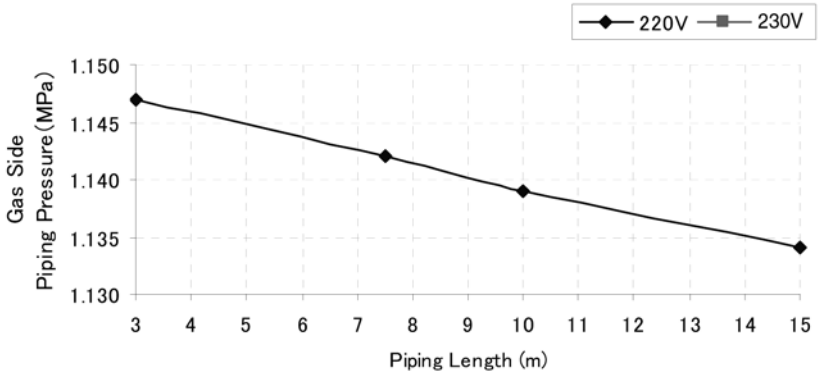

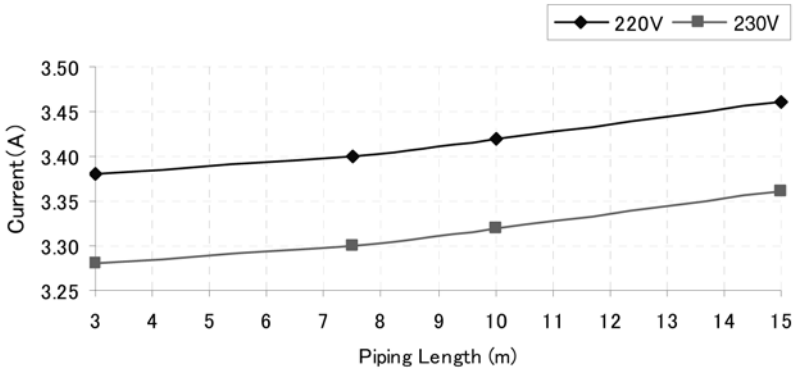

16.1.2 CS-S12KK CU-S12KK

- Cooling Characteristic
  - Room temperature: 27°C (DBT), 19°C (WBT)
  - Operation condition: High fan speed
  - Piping length: 7.5m
  - Compressor Frequency = Fc

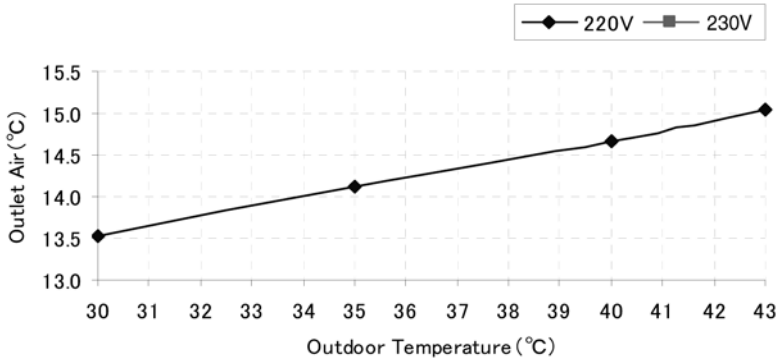

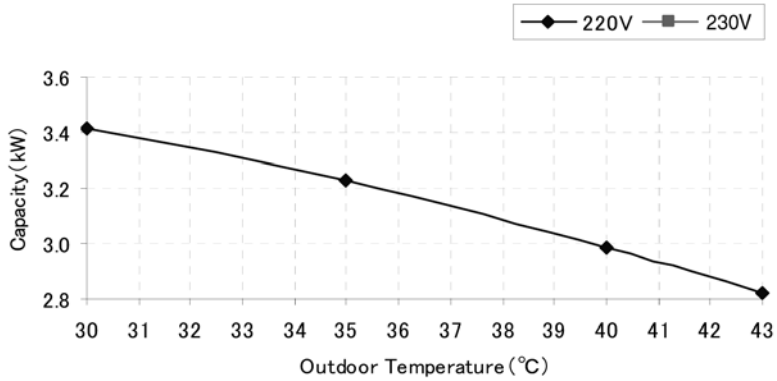

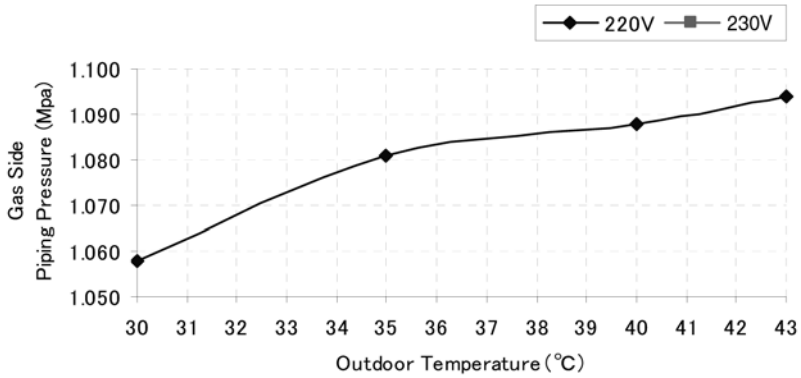

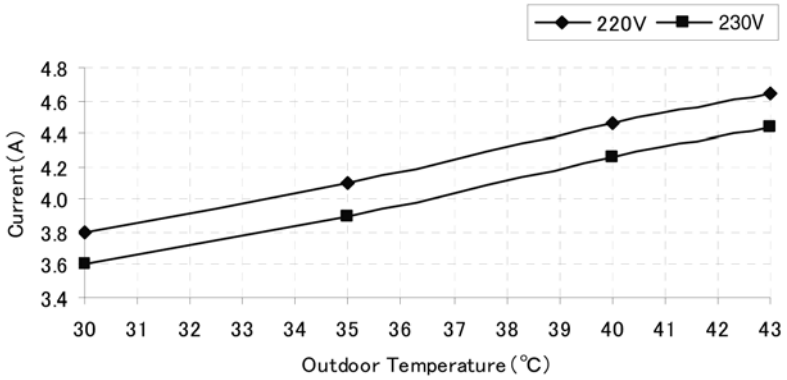

- Piping Length Characteristic
  - Room temperature: 27°C (DBT), 19°C (WBT)
  - Operation condition: High fan speed
  - Outdoor temperature: 35°C (DBT), 24°C (WBT)
  - Compressor Frequency = Fc

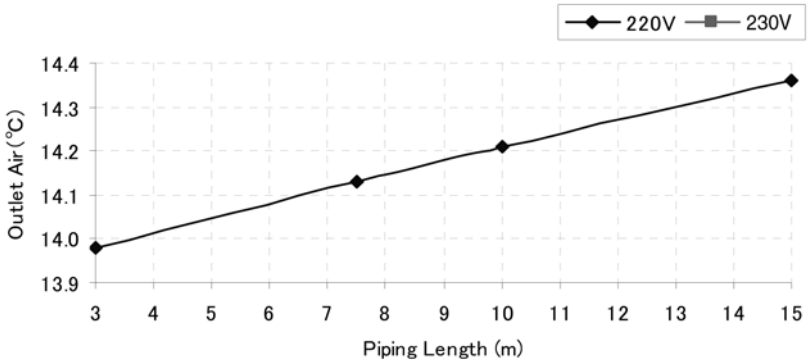

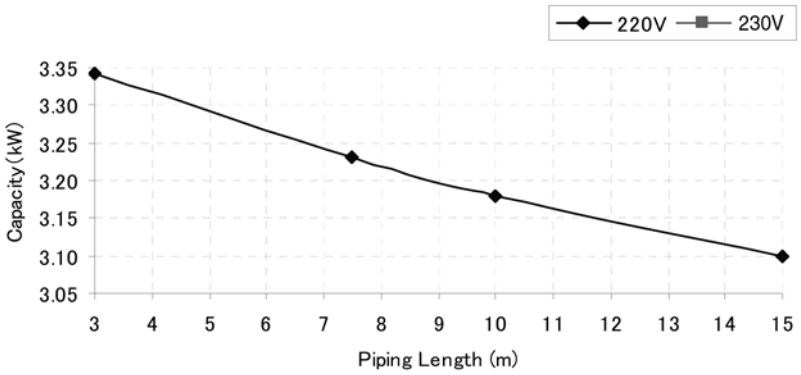

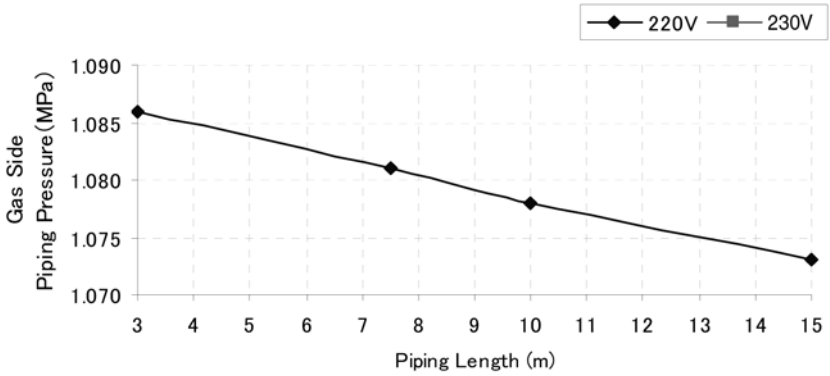

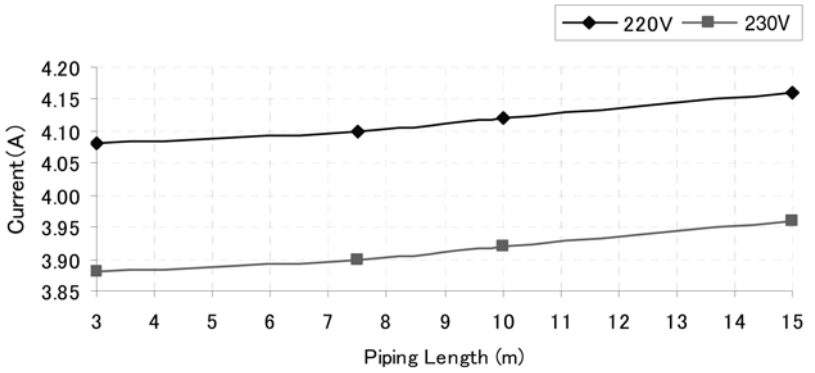

16.1.3 CS-S18KK CU-S18KK

- Cooling Characteristic
  - Room temperature: 27°C (DBT), 19°C (WBT)
  - Operation condition: High fan speed
  - Piping length: 5m
  - Compressor Frequency = Fc

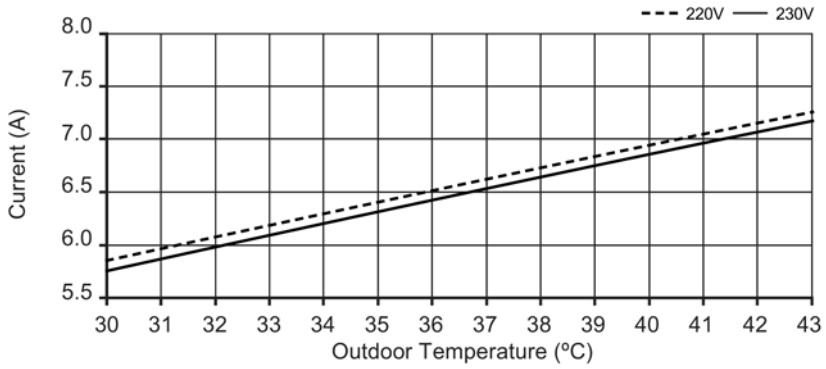

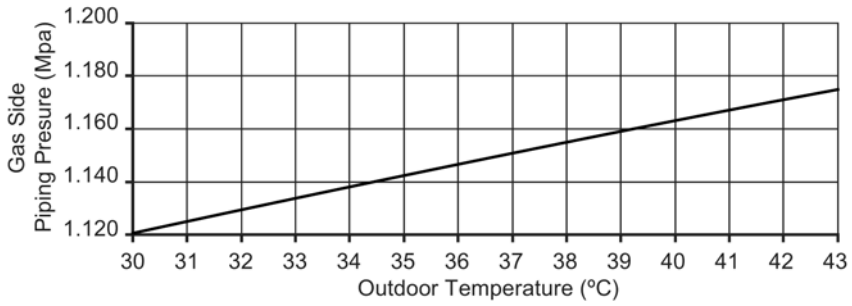

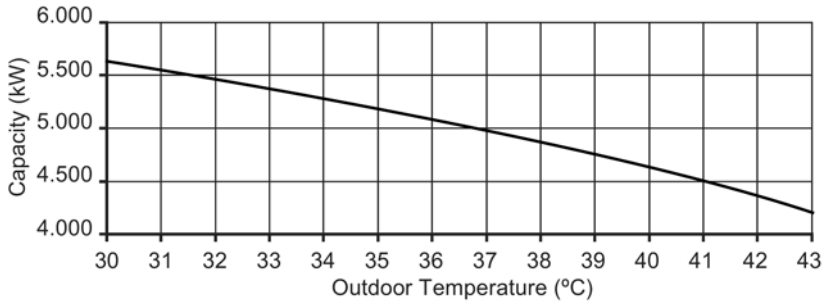

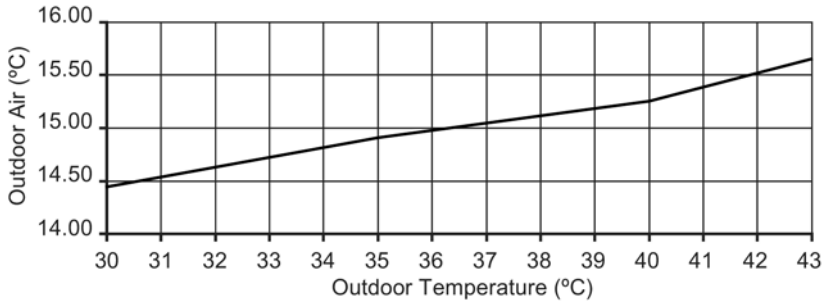

- Piping Length Characteristic
  - Room temperature: 27°C (DBT), 19°C (WBT)
  - Operation condition: High fan speed
  - Outdoor temperature: 35°C (DBT), 24°C (WBT)
  - Compressor Frequency = Fc

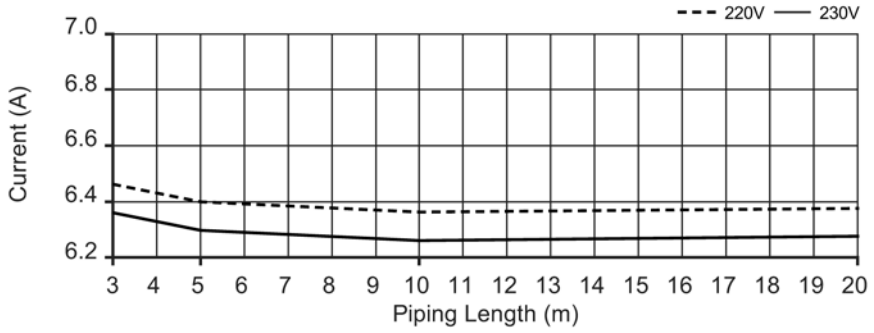

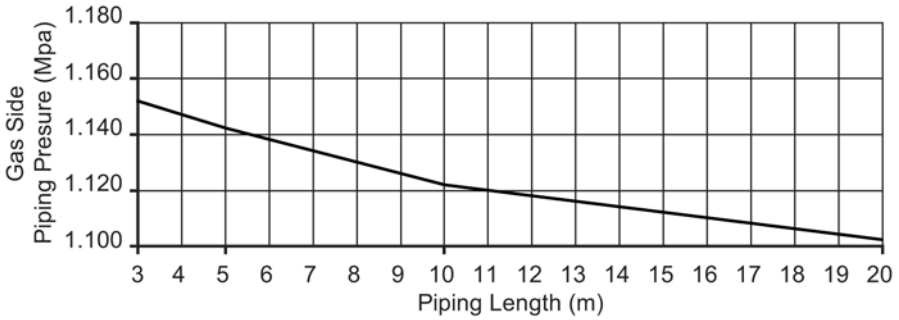

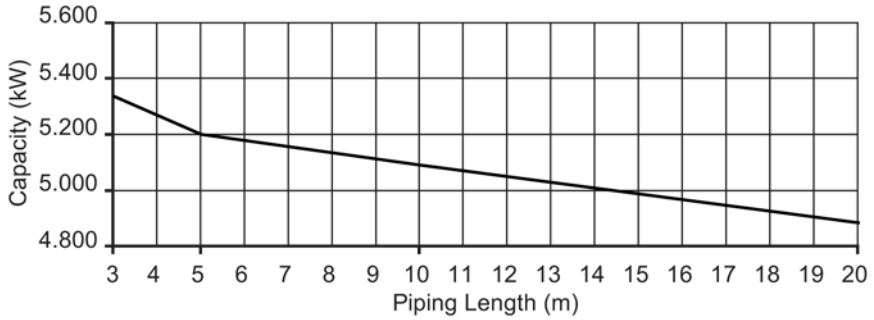

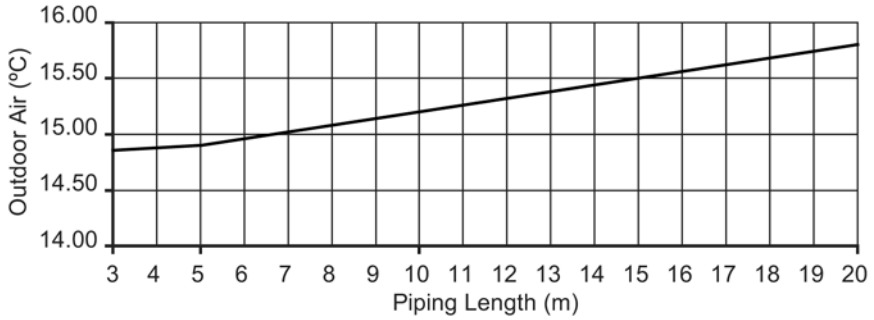

16.1.4 CS-S24KK CU-S24KK

- Cooling Characteristic
  - Room temperature: 27°C (DBT), 19°C (WBT)
  - Operation condition: High fan speed
  - Piping length: 5m
  - Compressor Frequency = Fc

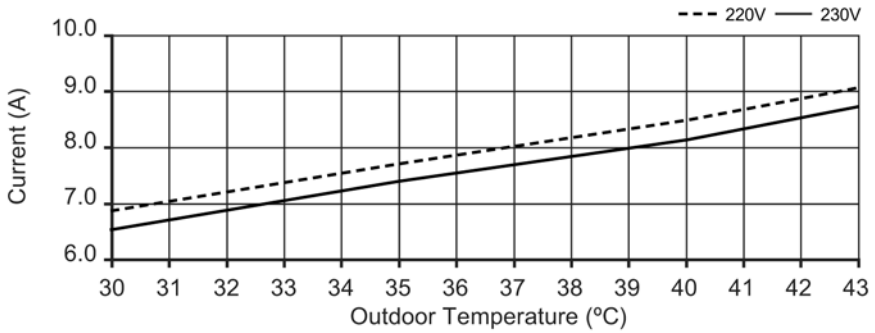

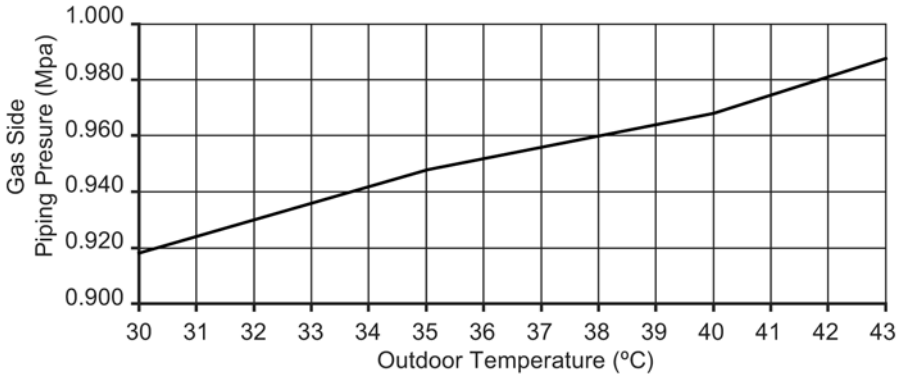

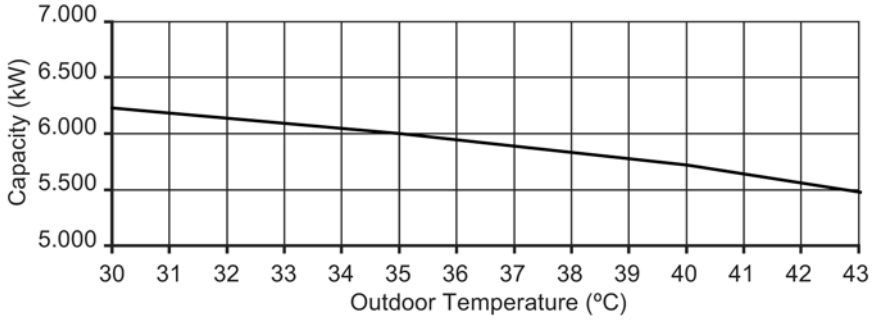

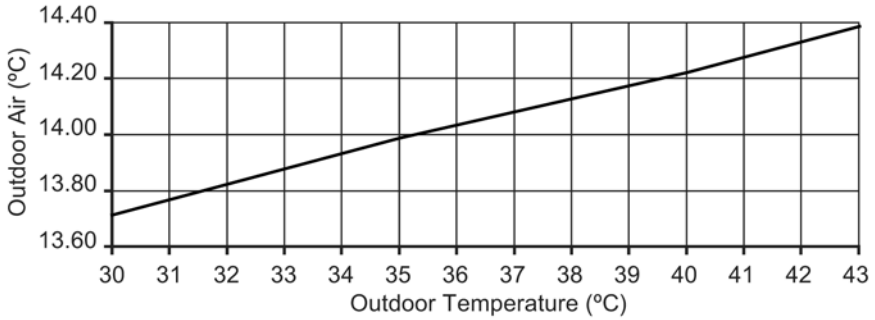

- Piping Length Characteristic
  - Room temperature: 27°C (DBT), 19°C (WBT)
  - Operation condition: High fan speed
  - Outdoor temperature: 35°C (DBT), 24°C (WBT)
  - Compressor Frequency = Fc

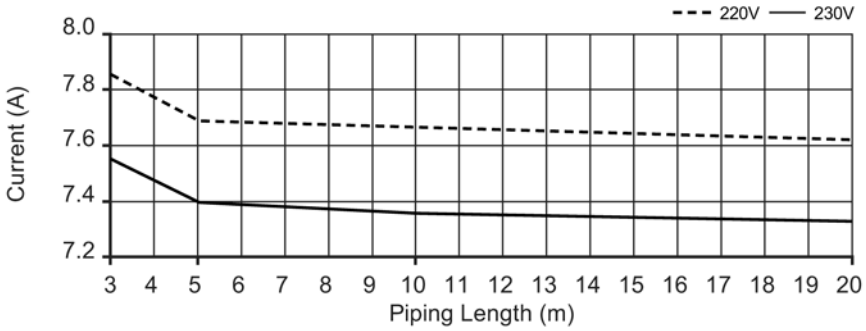

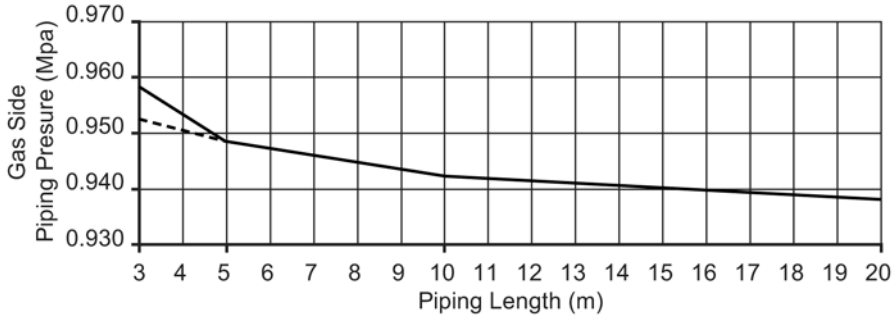

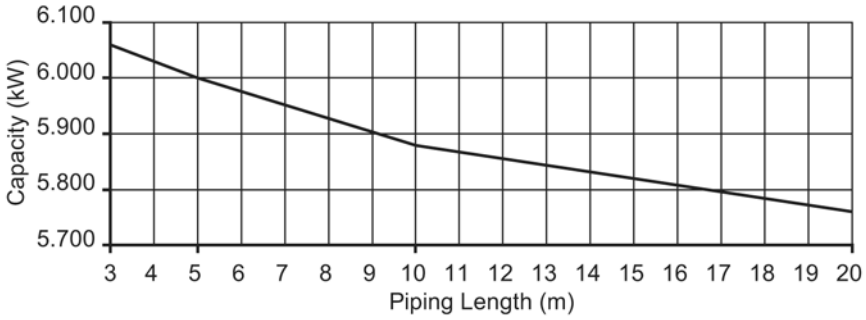

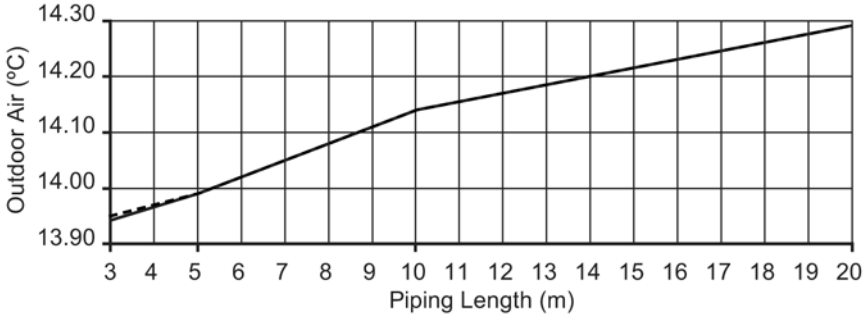

17 Exploded View and Replacement Pars List

17.1 Indoor Unit

17.1.1 CS-S9KKQ CS-S12KKQ

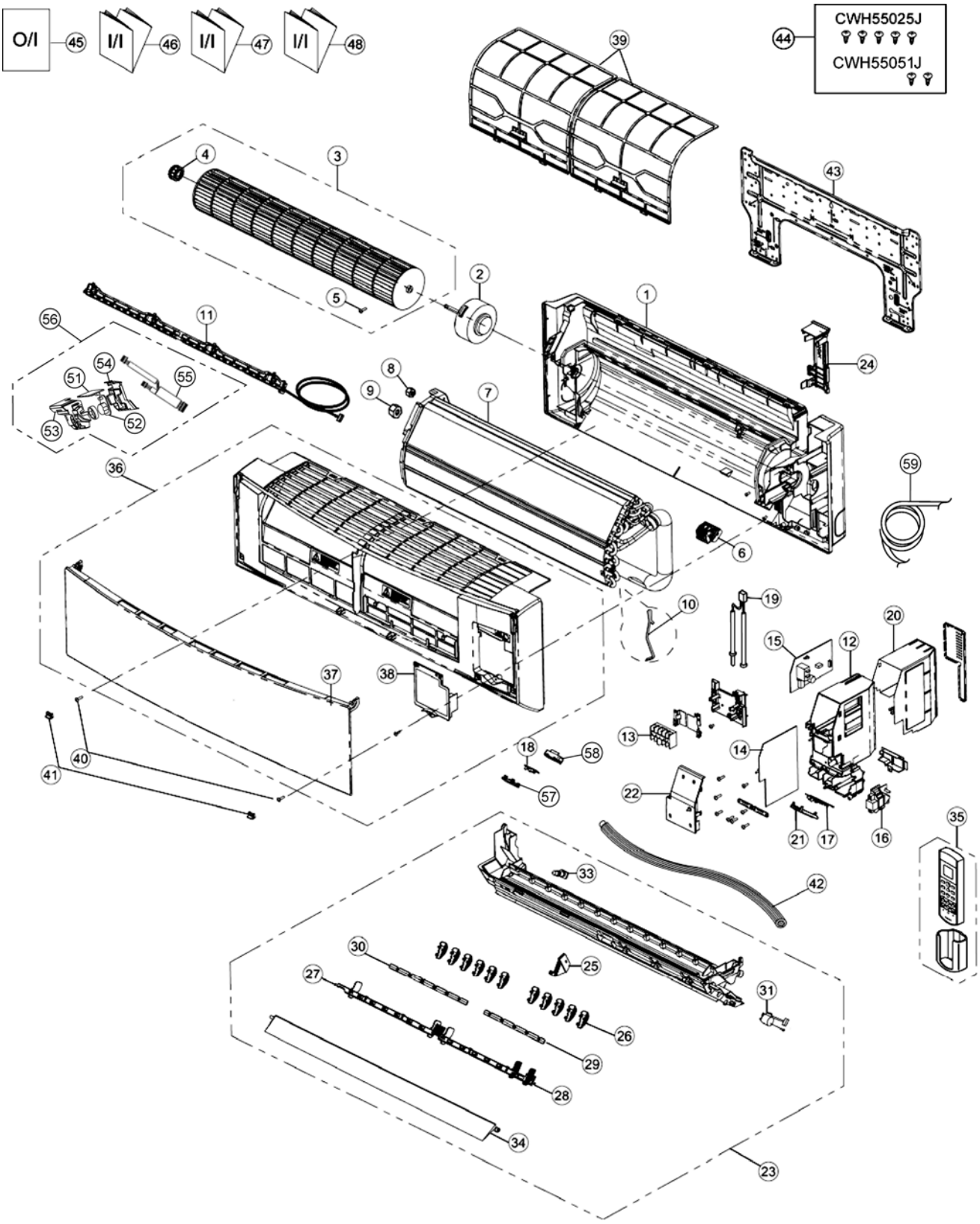

Note
The above exploded view is for the purpose of parts disassembly and replacement.
The non-numbered parts are not kept as standard service parts.

REF. NO.	PART NAME & DESCRIPTION	QTY.	CS-S9KKQ	CS-S12KKQ	Remark
1	CHASSY COMPLETE	1	CWD50C1653	←	
2	FAN MOTOR	1	CWA921420	←	O
3	CROSS-FLOW FAN COMPLETE	1	CWH02C1076	←	
4	BEARING ASSY	1	CWH64K007	←	
5	SCREW - CROSS-FLOW FAN	1	CWH551146	←	
6	GENERATOR COMPLETE	1	CWH94C0028	←	
7	EVAPORATOR	1	CWB30C2963	CWB30C2582	
8	FLARE NUT (LIQUID)	1	CWT251030	←	
9	FLARE NUT (GAS)	1	CWT251031	CWT251032	
10	CLIP FOR SENSOR	1	CWH32143	←	
11	E-ION AIR PURIFYING SYSTEM	1	CWD93C1090	←	
12	CONTROL BOARD CASING	1	CWH102370	←	
13	TERMINAL BOARD COMPLETE	1	CWA28C2435	CWA28C2437	
14	ELECTRONIC CONTROLLER - MAIN	1	CWA73C4362	CWA73C4363	O
15	ELECTRONIC CONTROLLER - POWER	1	CWA745289	←	O
16	ELECTRONIC CONTROLLER-HVU	1	CWA745348	←	O
17	ELECTRONIC CONTROLLER-INDICATOR	1	CWA745820	←	O
18	ELECTRONIC CONTROLLER-RECEIVER	1	CWA745288	←	O
19	SENSOR COMPLETE	1	CWA50C2401	CWA50C2122	O
20	CONTROL BOARD TOP COVER	1	CWH131350	←	
21	INDICATOR HOLDER	1	CWD933021	←	
22	CONTROL BOARD FRONT COVER CO.	1	CWH13C1183	←	
23	DISCHARGE GRILLE COMPLETE	1	CWE20C3084	CWE20C3084	
24	BACK COVER CHASSIS	1	CWD933019	←	
25	FULCRUM	1	CWH621102	←	
26	VERTICAL VANE	11	CWE241287	←	
27	CONNECTING BAR	1	CWE261152	←	
28	CONNECTING BAR	1	CWE261154	←	
29	CONNECTING BAR	1	CWE261155	←	
30	CONNECTING BAR	1	CWE261153	←	
31	AIR SWING MOTOR	1	CWA981240	←	O
33	CAP - DRAIN TRAY	1	CWH521096	←	
34	HORIZONTAL VANE COMPLETE	1	CWE24C1268	←	
35	REMOTE CONTROL COMPLETE	1	CWA75C3564	←	O
36	FRONT GRILLE COMPLETE	1	CWE11C4539	←	O
37	INTAKE GRILLE COMPLETE	1	CWE22C1482	←	O
38	GRILLE DOOR	1	CWE14C1029	←	
39	E-ION FILTER	2	CWD00K1016	←	
40	SCREW - FRONT GRILLE	2	XTT4+16CFJ	←	
41	CAP - FRONT GRILLE	2	CWH521194	←	
42	DRAIN HOSE	1	CWH851174	←	
43	INSTALLATION PLATE	1	CWH361097	←	
44	BAG COMPLETE - INSTALLATION SCREW	1	CWH82C1705	←	
45	OPERATING INSTRUCTION	1	CWF567176	←	
46	INSTALLATION INSTRUCTION	1	CWF614287	←	
47	INSTALLATION INSTRUCTION	1	CWF614288	←	
48	INSTALLATION INSTRUCTION	1	-	-	
51	ELECTRONIC CONTROLLER - COMPARATOR	1	CWA745790	←	O
52	ELECTRONIC CONTROLLER - ECO PATROL	1	CWA745791	←	O
53	COVER FOR PCB ECO (UPPER)	1	CWD933022	←	
54	COVER FOR PCB ECO (BOTTOM)	1	CWD933209	←	
55	LEAD WIRE - PCB ECO	1	CWA67C8483	←	
56	SENSOR COMPLETE (ECO)	1	CWA50C2708	←	
57	COVER FOR RECEIVER (UPPER)	1	CWD933192	←	
58	COVER FOR RECEIVER (BOTTOM)	1	CWD933193	←	
59	POWER SUPPLY CORD	1	CWA20C2851	←	

(Note)

- All parts are supplied from PHAAM, Malaysia (Vendor Code: 00029488).
- “O” marked parts are recommended to be kept in stock.

17.1.2 CS-S18KKQ CS-S24KKQ

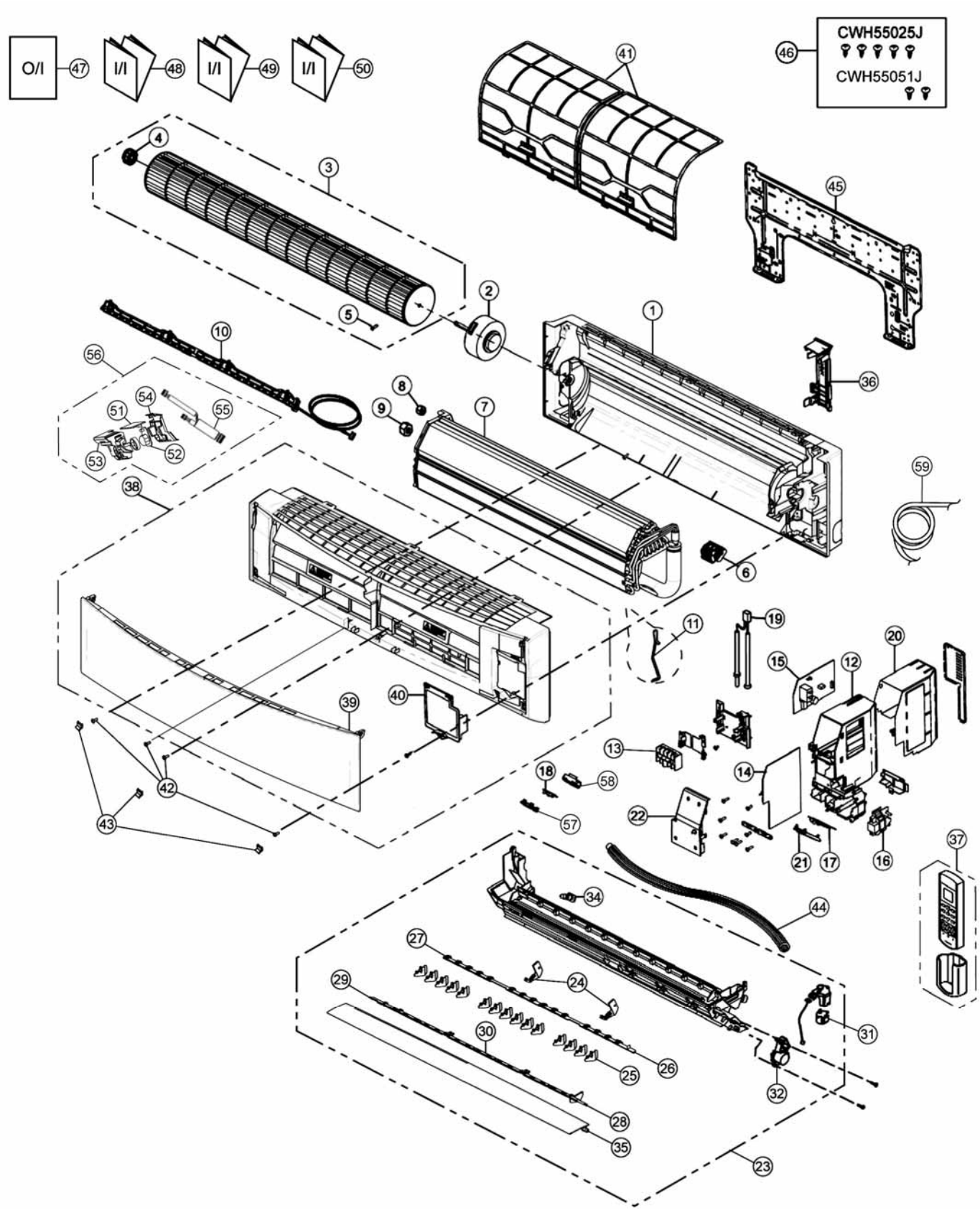

Note
The above exploded view is for the purpose of parts disassembly and replacement.
The non-numbered parts are not kept as standard service parts.

REF NO.	PART NAME & DESCRIPTION	QTY.	CS-S18KKQ	CS-S24KKQ	REMARK
1	CHASSY COMPLETE	1	CWD50C1654	←	
2	FAN MOTOR	1	L6CBYYYL0037	L6CBYYYL0039	O
3	CROSS FLOW FAN COMPLETE	1	CWH02C1077	←	
4	BEARING ASS'Y	1	CWH64K007	←	
5	SCREW - CROSS FLOW FAN	1	CWH551146	←	
6	GENERATOR COMPLETE	1	CWH94C0028	←	
7	EVAPORATOR	1	CWB30C2584	CWB30C2775	
8	FLARE NUT (LIQUID)	1	CWT251030	←	
9	FLARE NUT(GAS)	1	CWT251032	CWT251033	
10	E-ION AIR PURIFYING SYSTEM	1	CWD93C1090	←	
11	HOLDER SENSOR	1	CWH32143	←	
12	CONTROL BOARD CASING	1	CWH102370	←	
13	TERMINAL BOARD COMPLETE	1	CWA28C2357	←	O
14	ELECTRONIC CONTROLLER - MAIN	1	CWA73C4364	CWA73C4365	O
15	ELECTRONIC CONTROLLER - POWER	1	CWA745836	←	O
16	ELECTRONIC CONTROLLER-HVU	1	CWA745348	←	O
17	ELECTRONIC CONTROLLER-INDICATOR	1	CWA745820	←	O
18	ELECTRONIC CONTROLLER-RECEIVER	1	CWA745288	←	O
19	SENSOR COMPLETE	1	CWA50C2401	←	O
20	CONTROL BOARD TOP COVER	1	CWH131350	←	
21	INDICATOR HOLDER	1	CWD933021	←	
22	CONTROL BOARD FRONT COVER	1	CWH13C1183	←	
23	DISCHARGE GRILLE COMPLETE	1	CWE20C3007	←	
24	FULCRUM	2	CWH621103	←	
25	VERTICAL VANE	15	CWE241289	←	
26	CONNECTING BAR	1	CWE261156	←	
27	CONNECTING BAR	1	CWE261158	←	
28	CONNECTING BAR	1	CWE261157	←	
29	CONNECTING BAR	1	CWE261159	←	
30	CONNECTING BAR	1	CWE261160	←	
31	AIR SWING MOTOR	1	CWA981241	←	O
32	AIR SWING MOTOR	1	CWA98K1014	←	O
34	CAP - DRAIN TRAY	1	CWH521096	←	
35	HORIZONTAL VANE	1	CWE24C1295	←	
36	BACK COVER CHASSIS	1	CWD933031	←	
37	REMOTE CONTROL COMPLETE	1	CWA75C3558	←	O
38	FRONT GRILLE COMPLETE	1	CWE11C4547	←	O
39	INTAKE GRILLE COMPLETE	1	CWE22C1526	←	O
40	GRILLE DOOR	1	CWE14C1029	←	
41	E-ION FILTER	2	CWD00K1017	←	
42	SCREW - FRONT GRILLE	4	XTT4+16CFJ	←	
43	CAP - FRONT GRILLE	3	CWH521194	←	
44	DRAIN HOSE	1	CWH851174	←	
45	INSTALLATION PLATE	1	CWH361098	←	
46	BAG COMPLETE - INSTALLATION SCREW	1	CWH82C1705	←	
47	OPERATING INSTRUCTION	1	CWF567176	←	
48	INSTALLATION INSTRUCTION	1	CWF614287	←	
49	INSTALLATION INSTRUCTION	1	CWF614288	←	
50	INSTALLATION INSTRUCTION	1	-	-	
51	ELECTRONIC CONTROLLER - COMPARATOR	1	CWA745790	←	O
52	ELECTRONIC CONTROLLER – ECO PATROL	1	CWA745791	←	O
53	COVER FOR PCB ECO (UPPER)	1	CWD933192	←	
54	COVER FOR PCB ECO (BOTTOM)	1	CWD933193	←	
55	LEAD WIRE - PCB ECO	1	CWA67C8484	←	
56	SENSOR COMPLETE (ECO)	1	CWA50C2709	←	
57	COVER FOR RECEIVER (UPPER)	1	CWD933022	←	
58	COVER FOR RECEIVER (BOTTOM)	1	CWD933209	←	

59	POWER SUPPLY CORD	1	CWA20C2851	CWA20C2853	

(Note)

- All parts are supplied from PHAAM, Malaysia (Vendor Code: 00029488).
- “O” marked parts are recommended to be kept in stock.

17.2 Outdoor Unit

17.2.1 CU-S9KKQ

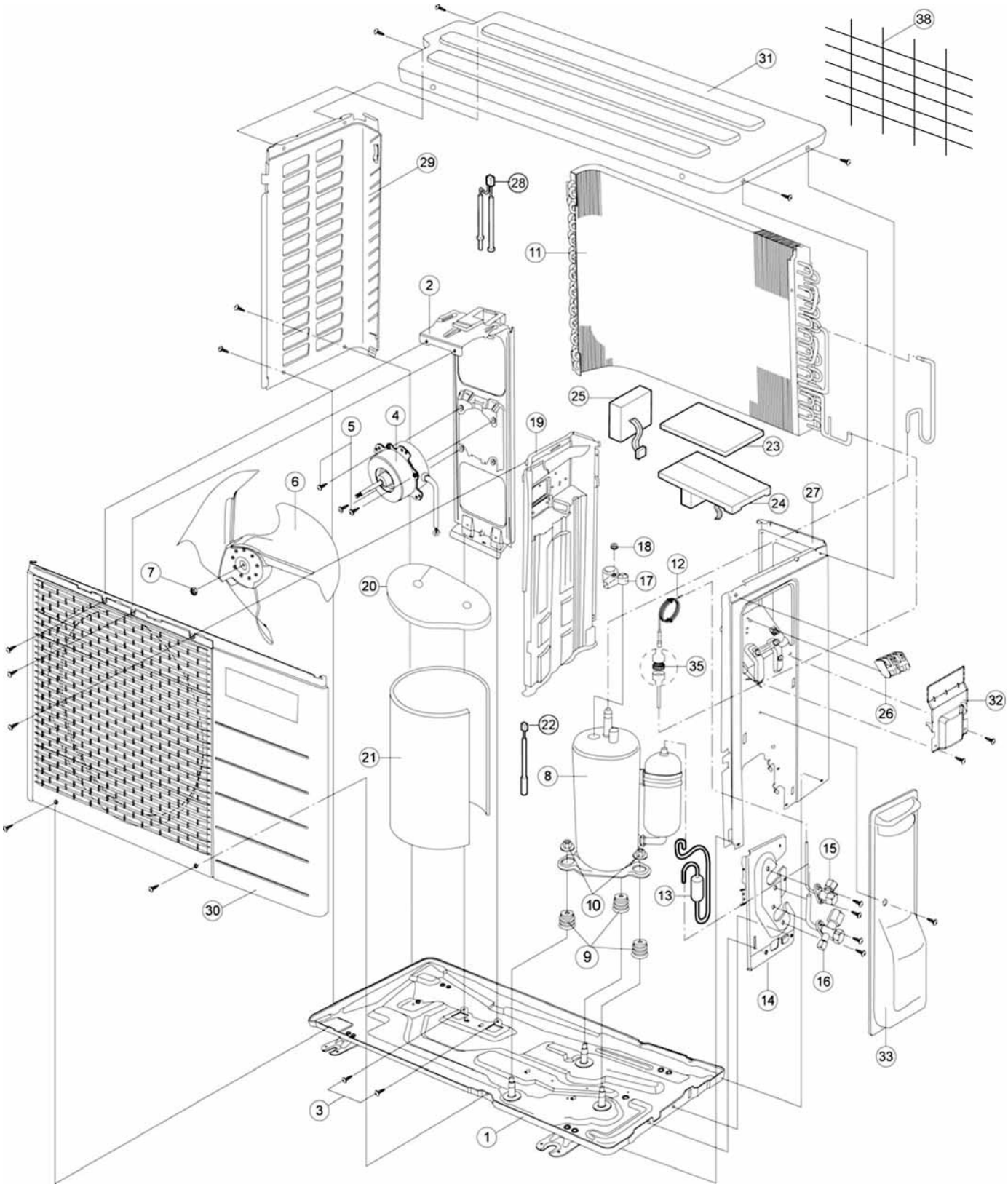

Note
The above exploded view is for the purpose of parts disassembly and replacement.
The non-numbered parts are not kept as standard service parts.

17.2.2 CU-S12KKQ

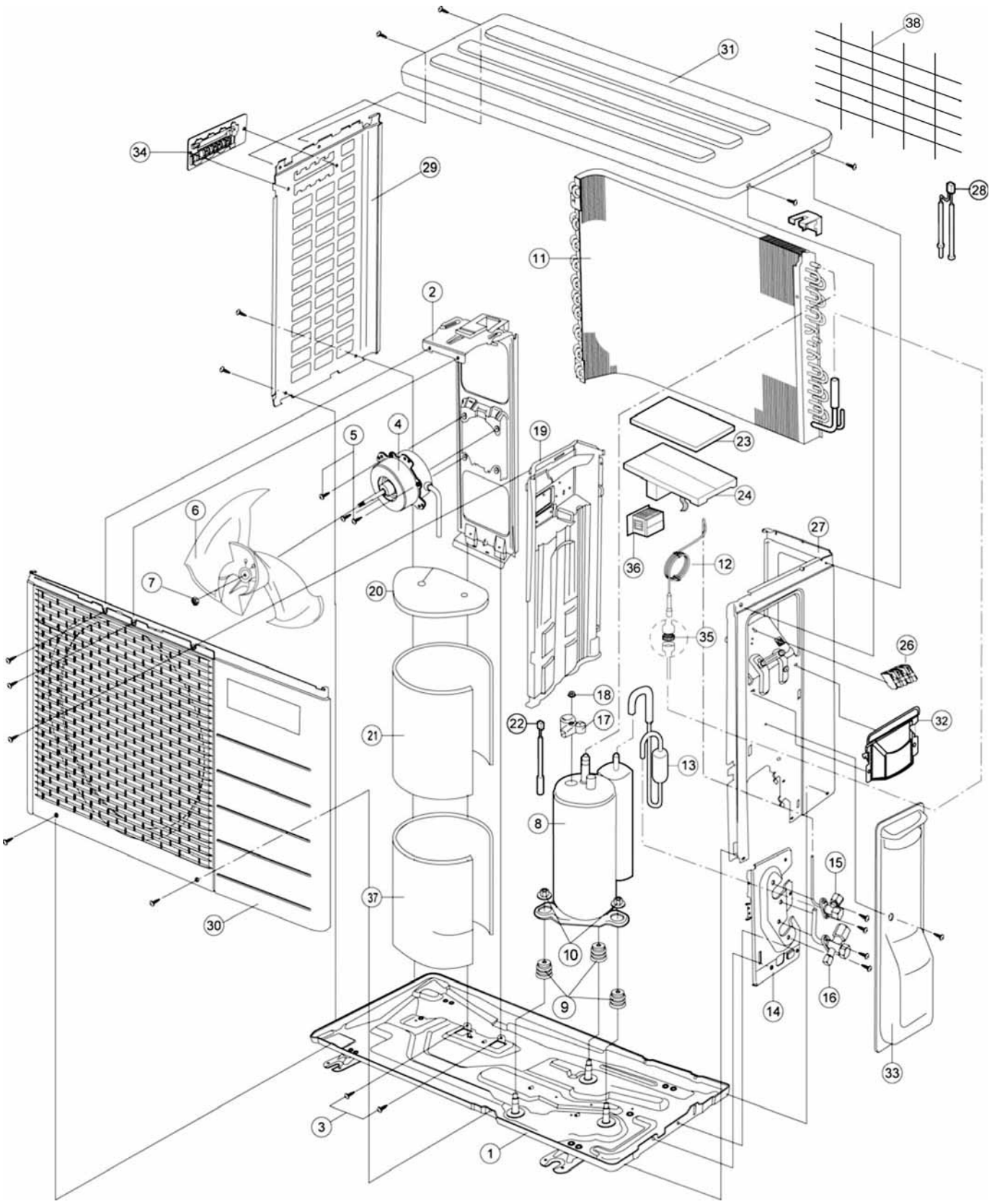

Note
The above exploded view is for the purpose of parts disassembly and replacement.
The non-numbered parts are not kept as standard service parts.

REF. NO.	PART NAME & DESCRIPTION	QTY.	CU-S9KKQ	CU-S12KKQ	REMARK
1	CHASSY ASSY	1	CWD50K2107	CWD50K2071	
2	FAN MOTOR BRACKET	1	CWD541074	CWD541030	
3	SCREW - FAN MOTOR BRACKET	2	CWH551217	←	
4	FAN MOTOR	1	CWA951604	CWA951466	O
5	SCREW - FAN MOTOR MOUNT	4	CWH55252J	CWH55406J	
6	PROPELLER FAN ASSY	1	CWH03K1020	CWH03K1010	
7	NUT - PROPELLER FAN	1	CWH56053J	←	
8	COMPRESSOR	1	5RS092XCE21	5RS092XCD21	O
9	ANTI - VIBRATION BUSHING	3	CWH50077	←	
10	NUT - COMPRESSOR MOUNT	3	CWH56000J	←	
11	CONDENSER	1	CWB32C2789	CWB32C2810	
12	CAPILLARY TUBE ASSY	1	CWB15K1229	CWB15K1279	O
13	DISCHARGE MUFFLER	1	CWB121010	-	O
14	HOLDER COUPLING	1	CWH351047	CWH351023	
15	2-WAYS VALVE (LIQUID)	1	CWB021421	CWB021449	O
16	3-WAY VALVE (GAS)	1	CWB011366	CWB011367	O
17	TERMINAL COVER	1	CWH171039A	←	
18	NUT - TERMINAL COVER	1	CWH7080300J	←	
19	SOUND PROOF BOARD	1	CWH151185	CWH151172	
20	SOUND PROOF MATERIAL	1	CWG302478	CWG302436	
21	SOUND PROOF MATERIAL	1	CWG302532	CWG302431	
22	SENSOR CO-COMP TEMP	1	CWA50C2205	←	O
23	CONTROL BOARD COVER-TOP	1	CWH131324	CWH131264	
24	ELECTRONIC CONTROLLER - MAIN	1	CWA73C4420R	CWA73C4443R	O
25	ELECTRONIC CONTROLLER -NF	1	CWH14C7640	-	O
26	TERMINAL BOARD ASSY	1	CWA28K1036J	←	O
27	CABINET SIDE PLATE CO.	1	CWE04C1186	CWE04C1159	
28	SENSOR CO-AIR TEMP AND PIPE TEMP	1	CWA50C2502	CWA50C2559	O
29	CABINET SIDE PLATE	1	CWE041110A	CWE041248A	
30	CABINET FRONT PLATE CO.	1	CWE06K1059	CWE06C1039	
31	CABINET TOP PLATE	1	CWE031041A	CWE031014A	
32	PLATE - C. B. COVER TERMINAL	1	CWH131325	CWH131301	
33	CONTROL BOARD COVER CO.	1	CWH13C1186	CWH13C1211	
34	HANDLE	1	-	CWE161010	
35	STRAINER	1	CWB11025	←	
36	REACTOR	1	-	G0C103J00029	O
37	SOUND PROOF MATERIAL	1	-	-	
38	WIRE NET	1	CWD041057A	CWD041111A	

(Note)

- All parts are supplied from PHAAM, Malaysia (Vendor Code: 00029488).
- “O” marked parts are recommended to be kept in stock.

17.2.3 CU-S18KKQ CU-S24KKQ

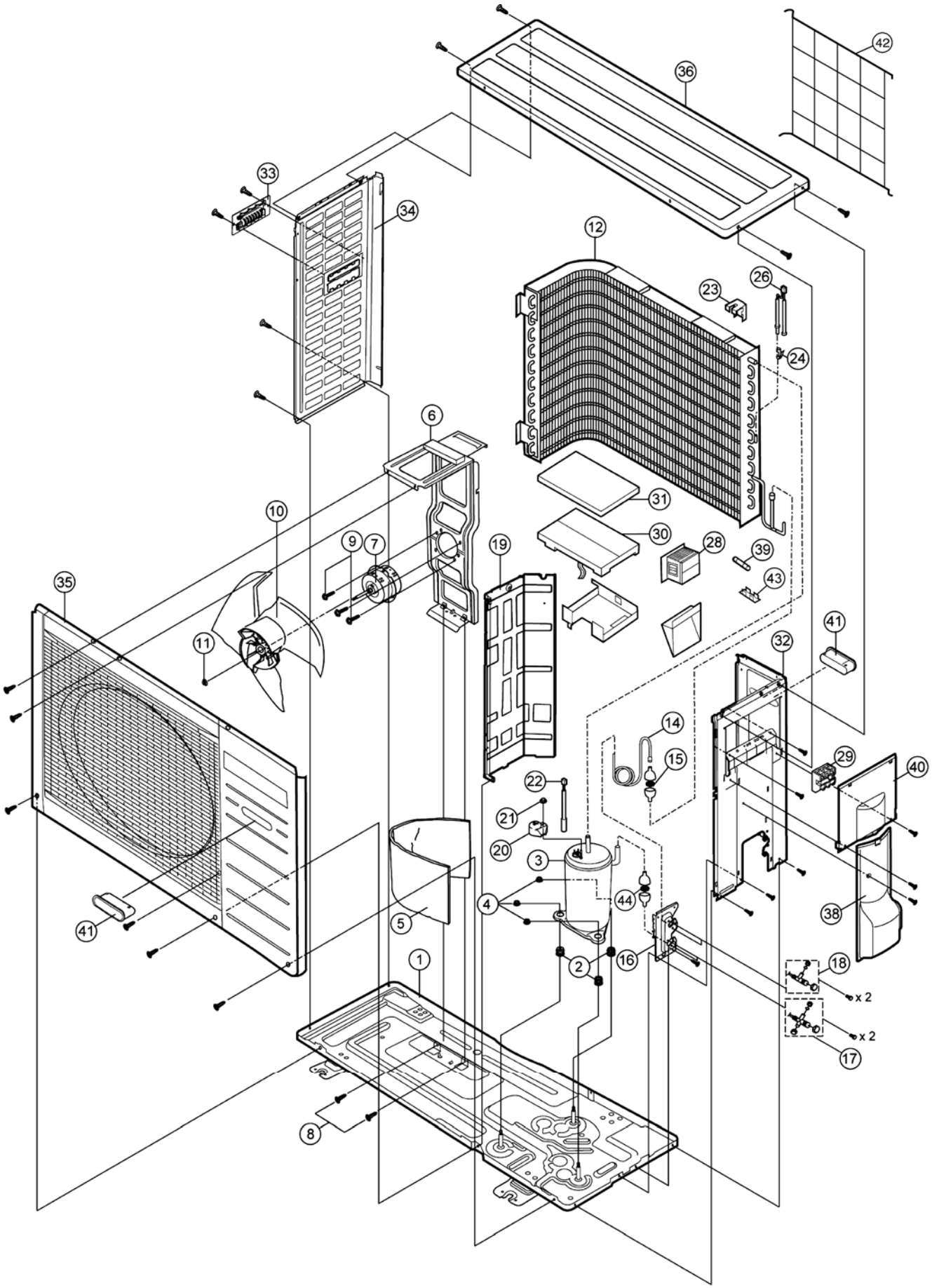

Note
The above exploded view is for the purpose of parts disassembly and replacement.
The non-numbered parts are not kept as standard service parts.

REF. NO.	DESCRIPTION & NAME	QTY.	CU-S18KKQ	CU-S24KKQ	REMARK
1	CHASSY ASS'Y	1	CWD50K2194	←	
2	ANTI-VIBRATION BUSHING	3	CWH50077	←	
3	COMPRESSOR	1	5CS130XAD04	←	O
4	NUT-COMPRESSOR MOUNT	3	CWH56000J	←	
5	SOUND PROOF MATERIAL	1	CWG302302	←	
6	FAN MOTOR BRACKET	1	CWD541065	←	
7	FAN MOTOR	1	CWA951605	←	O
8	SCREW - FAN MOTOR BRACKET	2	CWH551217	←	
9	SCREW - FAN MOTOR MOUNT	4	CWH55252J	←	
10	PROPELLER FAN ASSY	1	CWH03K1017	←	
11	NUT - PROPELLER FAN	1	CWH561038J	←	
12	CONDENSER	1	CWB32C2665	CWB32C2667	
14	CAPILLARY TUBE A'SSY	1	CWB15K1277	CWB15K1278	
15	STRAINER	1	CWB11025	←	
16	HOLDER - COUPLING	1	CWH351036	←	
17	3 WAYS VALVE (GAS)	1	CWB011361	CWB011362	O
18	2 WAYS VALVE (LIQUID)	1	CWB021419	←	O
19	SOUND PROOF BOARD	1	CWH151050	←	
20	TERMINAL COVER	1	CWH171039A	←	
21	NUT-TERMINAL COVER	1	CWH7080300J	←	
22	SENSOR CO-OUTDOOR COMPRESSOR TEMP	1	CWA50C2185	←	O
23	HOLDER SENSOR	1	CWMH320001	←	
24	HOLDER SENSOR	2	CWH32074	←	
26	SENSOR CO-OUTDOOR AIR TEMP AND HEAT EXCHANGE TEMP.	1	CWA50C2181	←	O
28	REACTOR	1	G0C153J00005	←	O
29	TERMINAL BOARD ASSY	1	CWA28K1036J	←	
30	ELECTRONIC CONTROLLER - MAIN	1	CWA73C4444R	CWA73C4445R	O
31	CONTROL BOARD COVER (TOP)	1	CWH131167	←	
32	CABINET SIDE PLATE	1	CWE041083A	←	
33	HANDLE	1	CWE161010	←	
34	CABINET SIDE PLATE (LEFT)	1	CWE041082A	←	
35	CABINET FRONT PLATE CO.	1	CWE06K1043	←	
36	CABINET TOP PLATE	1	CWE031031A	←	
38	CONTROL BOARD COVER COMPLETE	1	CWH131168	←	
39	FUSE CAP TERMINAL	1	K5D303BBA002	←	
40	CONTROL BOARD COVER(RIGHT-TOP)	1	CWH131169A	←	
41	HANDLE	2	CWE16000E	←	
42	WIRE NET	1	CWD041041A	←	
43	FUSE HOLDER	1	K3GB1PH00016	←	
44	STRAINER	1	CWB111004	←	

(Note)

- All parts are supplied from PHAAM, Malaysia (Vendor Code: 00029488).

"O" marked parts are recommended to be kept in stock.

Printed in Malaysia
SFYW1001-00